Syrian Private University
Faculty of Informatics & Computer Engineering

الجامعة السورية الخاصة
كلية هندسة الحاسوب والمعلوماتية

Home appliance control system via telephone line

A Junior Project Presented to the Faculty of Computer and Informatics Engineering
In Partial Fulfillment of the Requirements for the Degree
Of Bachelor of Engineering in Communications and Networks

Project prepared by

Andrei Al Natour

Ahmad Adel Khorshed

Lujain Salloum

Mohamad Al Jazaery

Under the supervision of

Prof. Dr. Eng.: Ali Skaf

Year: 2014/2015

Acknowledgment

We would like to thank our University (Syrian Private University) College of Computer and Informatics Engineering, and also our Academic staff.

We present our Project as a Recognition of the effort which everyone did.

Dedication

Dear father

To the one who gave the highest bid
To the one who sacrificed and were superior to sacrifice
To the one who I see in her eyes from the beauty of existence

Dear mother

To the Basils of heart and loved ones
To roses grown up together in one orchard

Brothers and sisters

Of their presence to give me strength
And makes me feel that I am not alone

To my relatives

To those who I lived with the sweetest years
To those who shared with me unforgettable memories

To my friends

To all those who supported us and were the reason we got here
We dedicate the fruits of our work

Abstract

In many cases it is desirable to turn on or off some appliances, such as air conditioning and heating units before arriving home, this is done by what are known as home automation systems. This project uses the Dual-Tone Multi-Frequency (DTMF) signals used in touch tone telephones, to control multi electronic devices from long distances using the phone.

A practical application case for this system is implemented to control five power electric devices built around an ATmega8 microcontroller. The automated loads can by any appliances, indoor and outdoor loads and lights, landscape sprinkler timers and more using their phones. The system is equipped with a Personal Identification Number (PIN) to assure the security of the operation.

Table of Contents

List of Figures

List of Tables

Introduction

Nowadays many people are looking for the means to improve life conditions, comfort and at the same time the simplicity of operating domestic electric appliances. A possible solution is to employ low-complexity and low-cost smart systems, which are capable to perform certain functions, designed and programmed to satisfy the requirements of the user. The main advantages of using telephone operated smart control systems are mobility, small size, low-power consumption and low-cost.

In fact choosing telephone line communication provides the following advantages:

- Low price of installation and service,
- Simplicity of usage,
- Comfort (phone line sockets available in every flat or house),
- Compatibility with all phone line networks,

Basically the telephone systems work in the same way in different countries, but there are some differences, which can mean that devices designed for one country, do not meet the regulations of other country and work poorly or not at all. The differences in local technical standards range from minor to severe and affect many of the signaling conditions on local loops.

By the end of the 1990s, the term of "domotics" was commonly used to describe any system in which informatics and telematics were combined to support activities in the home. The phrase is a portmanteau word formed from domus (Latin, meaning house) and informatics, and refers to the application of computer and robot technologies to domestic appliances.

For the design of a remote control system that will control the switching of multiple electric devices at the same time, DTMF (Dual-Tone Multi-Frequency) tones have been used. The aim of the proposed system is to develop a cost effective solution that will provide controlling of home appliances remotely and enable home security against intrusion in the absence of homeowner. The home appliances control system with an affordable cost was thought to be built that should be mobile providing remote access to the appliances and allowing home security. Though devices connected as home and office appliances consume electrical power. These devices should be controlled as well as turn on/off if required. Now it is a necessity to control devices more effectively and efficiently at anytime from anywhere.

After this introduction, **Chapter 1** gives the project specifications.

Chapter 2 focuses on Telephone Line signaling and DTMF Detection Unit.

Chapter 4 includes the steps of implement the system hardware. And **Chapter 5** includes the firmware flowchart of system.

Finally the Conclusion and future work to enhance activity of system is given.

Chapter 1
Specifications

The purpose of our project is to develop a control system of five AC loads or home appliances built on Atmega8 Microcontroller. The system is connected to phone line and is controlled by DTMF signal emitted by in fixed or mobile phones.

After a number of rings (set to 12), the system opens the line and indicates its presence by recognized tones. The system has a PIN (Personal Identification Number) code that can be modified by the end user. The load control (on/off) can be done only after the verification of this PIN. The call ends automatically after 20 seconds of the last dialed digit. **Figure 1.1** shows an illustration of the utilization of the proposed system.

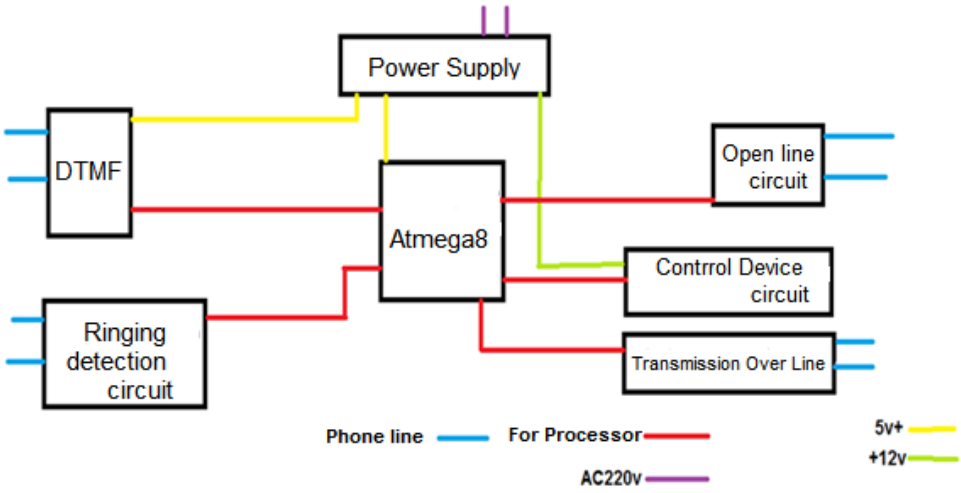

Figure 1.1 Proposed system.

Chapter 2
Telephone Line Signaling

2.1 Fixed Telephone Line Features

Plain old telephone systems (POTS) telephone line consists of one wire pair, which carries full duplex audio and the operating current for the telephone. The telephone connected to line is powered from current limited 48V power source, so phones on-hook, should measure around 48 volts DC. Practically the operating voltages of telephone systems can vary from 24V to 60V depending on the application, although 48V nominal voltage is the most commonly used [3].

When telephone is put off-hook the voltage between wires going to telephone drops down to the 3 to 9 volt range and typically a current of 20-60 mA will flow through the telephone. The typical operating current range is 20-35 mA. Any more than 55 or 60 mA and it might harm the phones. So the telephone equipment itself does not need any high voltages to operate. The remaining voltage drop from 48V to 3-9 volts occurs over the copper wire path and in the telephone central electronics. This high voltage is needed in the beginning because the length of the telephone line can be many kilometers, which means lots of wire resistance on the way to drop the voltage. Typical telephone DC resistance around 180 ohms and AC impedance is typically somewhere around 600 ohms. Typically the telephone central provide from 200 to 400 ohms of series resistance to protect from short circuits and decouple the audio signals [3].

To ring the telephone, the telephone company momentarily applies a 90 V RMS 20 Hz AC signal to the line. Even with a thousand ohms of line resistance, this is still a bit of a shock. The ring signal is much the same, worldwide. It is around 90V at a frequency between 16 Hz and 50Hz (20-25 Hz quite common). But its timings are wildly different, as are the return tones it generates.

While digital telephone lines are quickly coming to the telecom field, it seems that analogue telephone lines are still here to stay for a long time. Strangely enough, fax machines and modems will keep analog lines available even in buildings with ISDN and digital PBXs.

To ensure the proper functioning of the device we can set certain limits in operating regimes of the device. This is caused by the obvious simplicity of the circuit. There are no elements ensuring constant output or operation principles in the wide range of line parameters. In the case the circuit is not working properly we must check rather it satisfies the following requirements:

Mode	**Voltage**
Stand-by	50 VDC
Talk	10 VDC
Ring	100 VAC

Table 2.1 Requirements for telephone line

2.2 DTMF Detection Unit

DTMF detection is the main object before starting to control the appliances. In this chapter we will discuss in details the DTMF signaling and detection using several methods, and later we will show the integrated circuit we use in this project, and how to get its output on 16 different output line.

2.2.1 DTMF Signaling

DTMF signaling, increasingly being employed worldwide with push-button telephone sets, offers a high dialing speed over the dial-pulse signaling used in conventional rotary telephone sets. In recent years, DTMF signaling also found many applications such as automatic redial, modems that use DTMF for dialing stored numbers to connect with network service providers. DTMF has also been used in interactive remote access control with computerized automatic response systems such as airline's information systems, remote voice mailboxes, electronic banking systems, as well as many semiautomatic services via telephone networks. DTMF signaling scheme, reception, testing, and implementation requirements are defined in the International Telecommunication Union Recommendations ITU-T Q.23 and Q.24.

DTMF generation is based on a 4×4 grid matrix shown in Figure 2.1. This matrix represents 16 DTMF signals including numbers 0–9, special keys * and #, and four letters A–

D. The letters A–D are assigned to unique functions for special communication systems such as the military telephony systems.

The DTMF signals are based on eight specific frequencies defined by two mutually exclusive groups. Each DTMF signal consists of two tones that must be generated simultaneously. One is chosen from the low-frequency group to represent the row index, and the other is chosen from the high-frequency group for the column index [3].

The implementation of a DTMF signal involves adding two finite-length digital sinusoidal sequences with the later simply generated by using look-up tables or by computing a polynomial expansion [2]. By pressing a key, for example number 3, it will generate a dual-tone consist of 697 Hz for the low group, and 1477 Hz for the high group, as shown in Figure2.2.

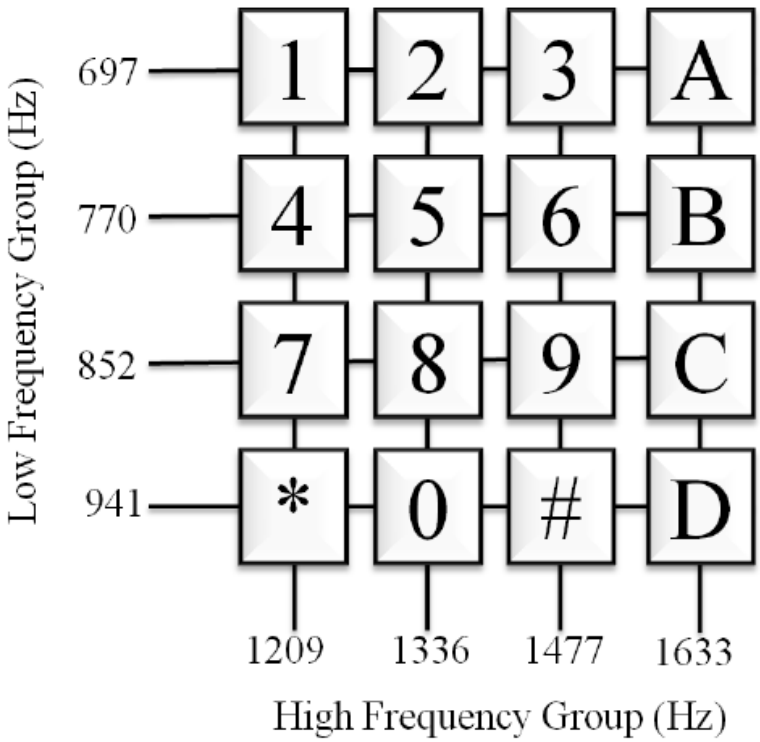

Figure 2.1 Telephone keypad matrix [1]

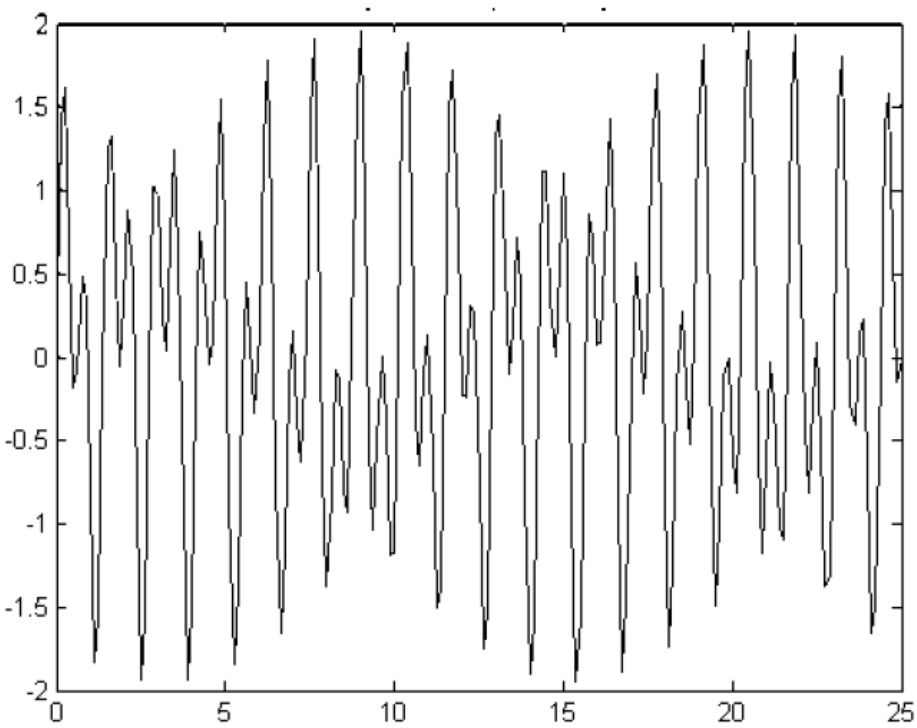

Figure 2.2 DTMF signal of key number 3 [1]

A DTMF decoder must able to accurately detect the presence of these tones specified by ITU-T Q.23. The decoder must detect the DTMF signals under various conditions such as frequency offsets, power level variations, DTMF reception timing inconsistencies, etc. DTMF decoder implementation requirements are detailed in ITU-T Q.24 recommendation.

For voice over IP (VoIP) applications, a challenge for DTMF signaling is to pass through the VoIP networks via speech coders and decoders. When DTMF signaling is used with VoIP networks, the DTMF signaling events can be sent in data packet types. The procedure of how to carry the DTMF signaling and other telephony events in real-time transport protocol (RTP) packet is defined by Internet engineering task force RFC2833 specification [3].

2.2.2 DTMF Detection

This section introduces methods for detecting DTMF tones used in communication networks. The correct detection of a DTMF digit requires both a valid tone pair and the correct timing intervals. The DTMF signaling may be used to set up a call and to control functions, for that it is necessary to detect DTMF signal in the presence of speech [3].

Since the signaling frequencies are all located in the frequency band used for speech transmission, this is an in-band system. Interfacing with the analog input and output devices is provided by codec (coder/decoder) chips, or A/D and D/A converters. Although a number of chips with analog circuitry are available for the generation and decoding of DTMF signals in a single channel, these functions can also be implemented digitally on DSP chips [2].

The implementation of DTMF decoder involves the detection of the DTMF tones, and determination of the correct silence between the tones. In addition, it is necessary to perform additional assessments to ensure that the decoder can accurately distinguish DTMF signals in the presence of speech.

2.2.2.1 DTMF Decoder Specifications

The implementation of DTMF decoder involves the detection of the DTMF tones, and determination of the correct silence between the tones. In addition, it is necessary to perform additional assessments to ensure that the decoder can accurately distinguish DTMF signals in the presence of speech.

DTMF decoders are required to detect frequencies with a tolerance of ±1.5%. The frequencies that are offset by ±3.5% or greater must not be recognized as DTMF signals. For Japan, the detection of frequencies has a tolerance of ±1.8 %, and the tone offset is limited to ±3.0 %. The ITU-T requirements are listed in the Table 2.

Signal frequencies	Low group	697, 770, 852, 941 Hz
	High group	1209, 1336, 1477, 1633 Hz
Frequency tolerance	Operation	$\leq 1.5\%$
	Nonoperation	$\geq 3.5\%$
Signal duration	Operation	40 ms min
	Nonoperation	23 ms max
Twist	Forward	8 dB max
	Reverse	4 dB max
Signal power	Operation	0 to −25 dBm
	Nonoperation	−55 dBm max
Interference by echoes	Echoes	Should tolerate echoes delayed up to 20 ms and at least 10 dB down

Table 2.2 Requirements of DTMF specified in ITU-T

2.2.2.2 DTMF Detection Methods

The scheme used to identify the two frequencies associated with the button that has been pressed is shown in Figure 2.3. Here, the two tones are first separated by a low pass and a high pass filter. The pass band cutoff frequency of the low pass filter is slightly above 100 Hz, whereas that of the high pass filter is slightly below 1200 Hz. The output of each filter is next converted into a square wave by a limiter and then processed by a bank of band pass filters with narrow pass bands. The four band pass filters in the low-frequency channel have center frequencies at 697 Hz, 770 Hz, 852 Hz, and 941 Hz. The four band pass filters in the high-frequency channel have center frequencies at 1209 Hz, 1336 Hz, 1477 Hz, and 1633 Hz. The detector following each band pass filter develops the necessary dc switching signal if its input voltage is above a certain threshold.

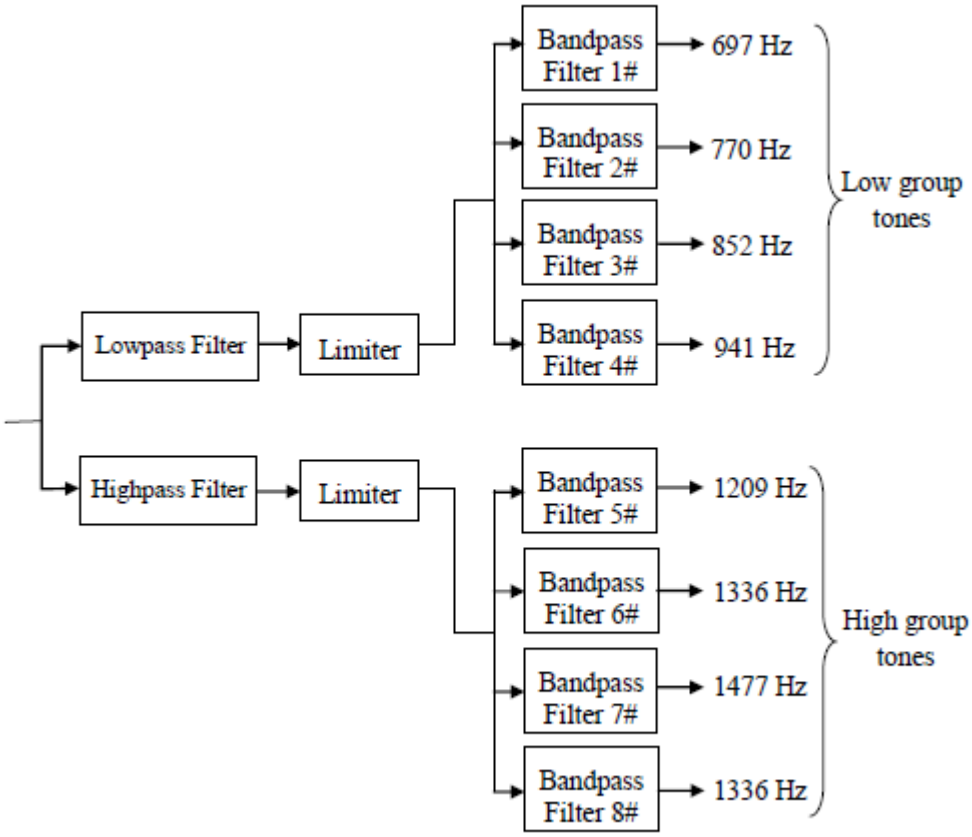

Figure 2.3 The DTMF detection scheme

The entire signal processing functions described above are usually implemented in practice in the analog domain. However, increasingly, these functions are being implemented using digital techniques.

Digital techniques surpass analog equivalents in performance, since it provides better precision, stability, versatility, and reprogram ability to meet other tone standards. The DTMF digital decoder computes the Discrete Fourier Transform (DFT) samples closest in frequency to the eight DTMF fundamental tones. The DFT computation scheme employed is a slightly modified version of Goretzel's Algorithm. The flow chart of DTMF detection using the modified Goertzel's Algorithm is illustrated in Figure 2.4. Six tests are followed to determine if a valid DTMF digit has been detected [2].

2.2.3 The integrated DTMF Decoder

The integrated DTMF decoder is the device that receives the incoming DTMF data and converts it into a respective 4-bit binary coded decimal (BCD) numbers as shown in the Table 2.3.

F_{low}	F_{high}	Key	Q_4	Q_3	Q_2	Q_1
697	1209	1	0	0	0	1
697	1336	2	0	0	1	0
697	1477	3	0	0	1	1
770	1209	4	0	1	0	0
770	1336	5	0	1	0	1
770	1477	6	0	1	1	0
852	1209	7	0	1	1	1
852	1336	8	1	0	0	0
852	1477	9	1	0	0	1
941	1209	0	1	0	1	0
941	1336	*	1	0	1	1
941	1477	#	1	1	0	0
697	1633	A	1	1	0	1
770	1633	B	1	1	1	0
852	1633	C	1	1	1	1
941	1633	D	0	0	0	0

Table 2.3 The respective DTMF data into BCD digits

Chapter 3
Proposed Architecture

The system is connected to phone line and is controlled by DTMF signal emitted by in fixed or mobile phones. **Figure 3.1** shows an illustration of the utilization of the proposed system.

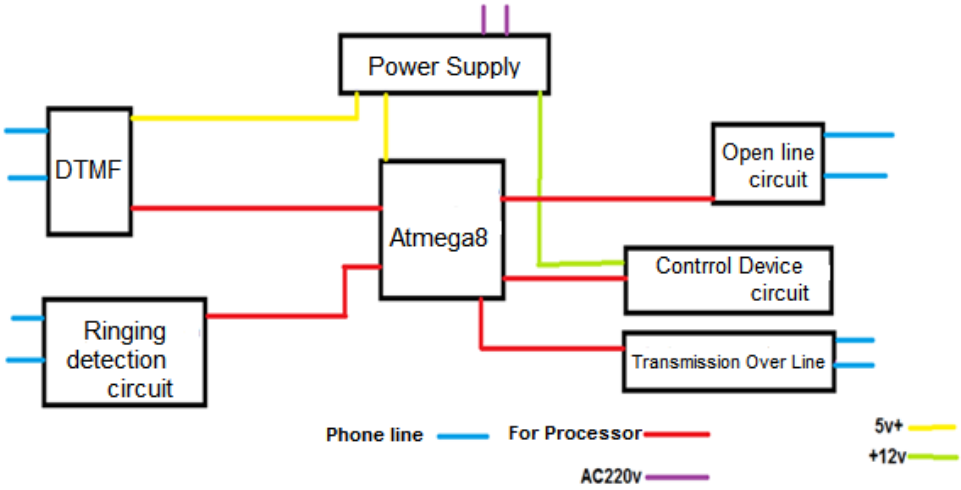

Figure 3.1 Proposed Architecture.

3.1 Input terminals

1. **DTMF circuit:** Converts telephone tone signal to the electrical signals in digital form symbolizes sent to the processor, DATA0, DATA1, DATA2, DATA3, in addition to the Data Valid output.
2. **Ringing detection circuit**: use to verification the case of ringing when the arrival voltage level is 100 Volt, and the Photo coupler isolates the input signal from the output signal and the resistance to isolate currents that are less than 100V.

3.2 Output terminals

1. **Open line circuit:** after reaching a specified number of rings to start the controlling process, the processor send orders to circuit to load resistor value on the line, where the switch senses this resistance to change the case of line to busy and start sending information.
2. **Transmission over the phone line circuit:** Converts the tone signals issued from digital signal from processor to audio signal which converted properly to carry on the line.

3. **Devices control system circuit:** This circuit receive commands from the processor to the connected devices are running with this terminal.

Chapter 4
Practical Implementing

4.1 Schematic Production

The implementation of the Home Automation system based on phone line is shown in figure below:

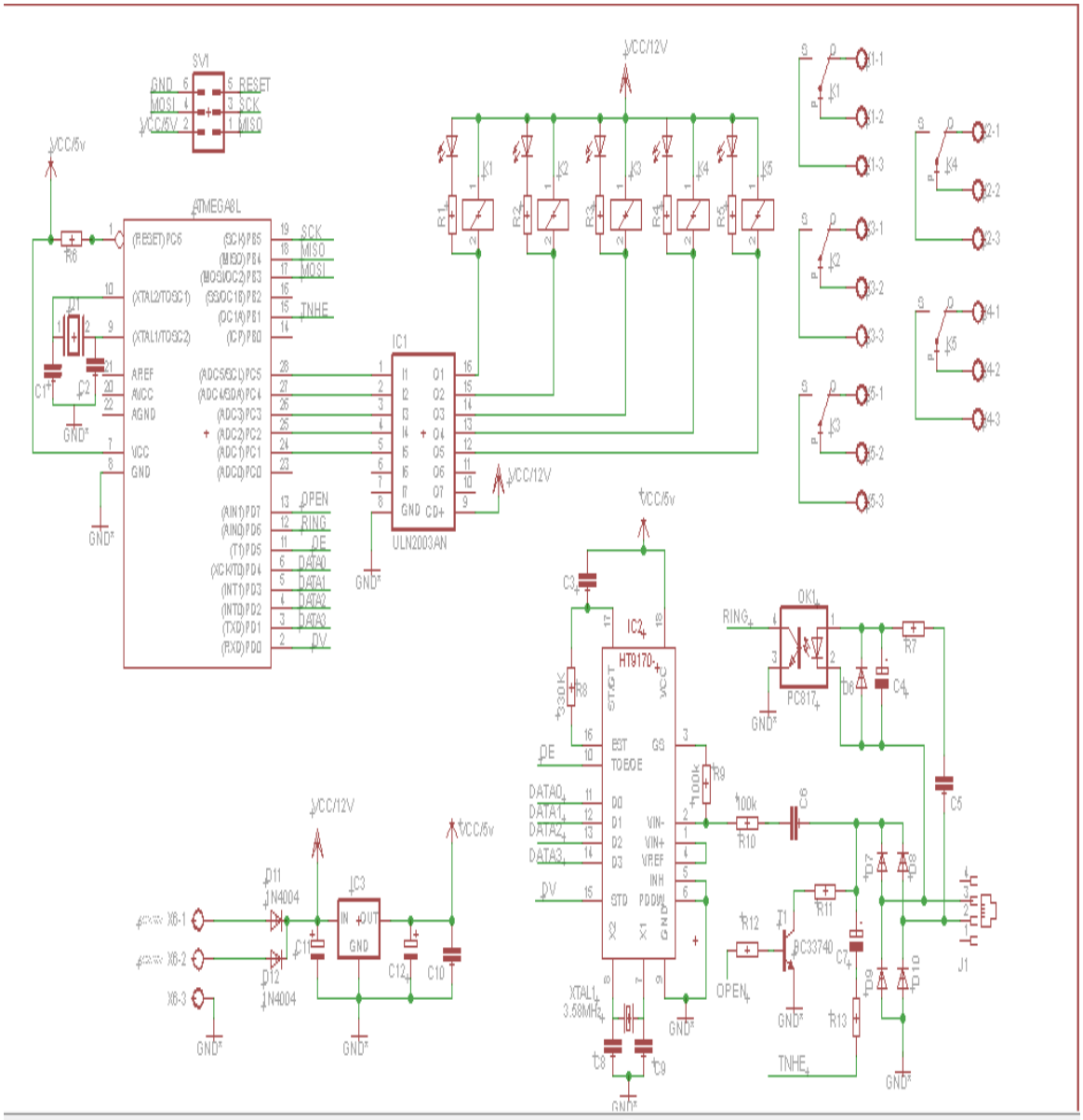

Figure 4.1 System design

In the process of schematic production we have tried to use as more similar elements as possible. As the source of the control the Atmega8 was used. It allows rewriting the internal program, thus experiments can be performed without any damage. For this purpose there is 1Kb of Flash memory for program code. In the case of massive production after the development of

such a system. The microcontrollers produced by Microchip are comparably old, thus their functional abilities were tested by the time. There is a huge amount of software for programmers available that result in simplicity of programming.

Additionally to the device the programmer was created. For the decoding of the DTMF signals external hardware DTMF decoder was used. Of course there was a possibility to make

DTMF decoder by program inside the Atmega, but then the functionality would be less because of small program memory. For the detailed information about the parameters and characteristics features of the Microcontroller and DTMF decoder look Appendix.

Also the power source for 5 VDC were done and inserted as the part of the system. And 12 VDC to relays. 5 V was done internal because of the system to be more stable and reliable. For all the other circuit parts the standard and quite cheap elements were used. As the indication of the device functioning LED were used at several outputs as indicators. In general here is no need of them for proper device operation, but the purpose was to make the device more friendly and obvious functioning principles.

4.2 DTMF HT9170B IC Decoder

4.2.1 General Description

The DTMF system uses eight frequency signals transmitted in pairs to represent sixteen numbers, symbols and letters (Table 4.1). Pressing a key will cause a high and low tone for each of the two frequencies. The HT9170B IC, using digital counting techniques, decodes these two tones to determine the key being pressed. The tone from the phone is filtered through the operational filter. A high voltage on the Output enable pin (pin10) enables outputs D0, D1, D2 and D3, which are the decoded outputs of the IC. DV (pin 15) is an output pin that is set high by the IC just after the output pins D0-3 have been filled; this action shows the data is valid and usable. RT/GT and EST monitor the time taken for the authenticity check of the tone. If the tone is too long the steering control mechanism of these pins will automatic fill the latches of the D0, D1, D2 and D3 pins after which it will set the DV pin high to indicate the output is ready for use by the microcontroller. By this process the DTMF decoder can decode 16 different key tones in 4 bit binary code output.[1]

	1209 Hz	1336Hz	1477Hz	1633Hz
697Hz	1	2	3	A
770Hz	4	5	6	B
852Hz	7	8	9	C
941Hz	*	9	#	D

Table 4.1 DTMF Keypad frequencies

Digit	**OE**	**D0**	**D1**	**D2**	**D3**
1	**H**	**1**	**0**	**0**	**0**
2	H	0	1	0	0
3	H	1	1	0	0
4	H	0	0	1	0
5	H	1	0	1	0
6	H	0	1	1	0
7	H	1	1	1	0
8	H	0	0	0	1
9	H	1	0	0	1
0	H	0	1	0	1

Table 4.2 Four Bit binary code for each key tone for number

The HT9170B DTMF decoder IC uses a digital counting technique to determine the frequencies of the limited tones and to verify that they correspond to standard DTMF frequencies. The DTMF tone is a form of one way communication between the dialer and the telephone exchange. The whole communication consists of the touch tone initiator and the tone decoder or detector. The decoded bits can be interfaced to a computer or microcontroller for further application.

As technology established, pulse or dial tone technique were invented for telephone communication switching. It employs electronics and computers to support switching operations. DTMF is the ultimate technique used in any of the Mobile, Telephone communication systems.

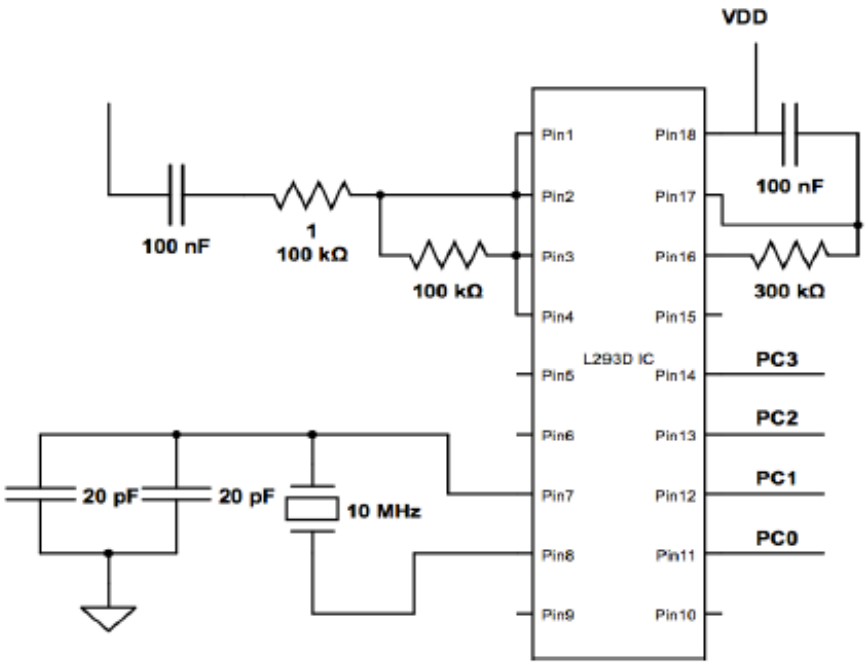

Figure 4.2 HT9170B IC Decoder

4.2.2 Features

- Operating voltage: 2.5V~5.5V
- Minimal external components
- No external filter is required
- Low standby current (on power down mode)
- Excellent performance

4.2.3 Operation

Converts telephone tone signal to the electrical signals in digital form symbolizes sent to the processor as figure 4.3 and send commands DATA0. DATA1. DATA2. DATA3

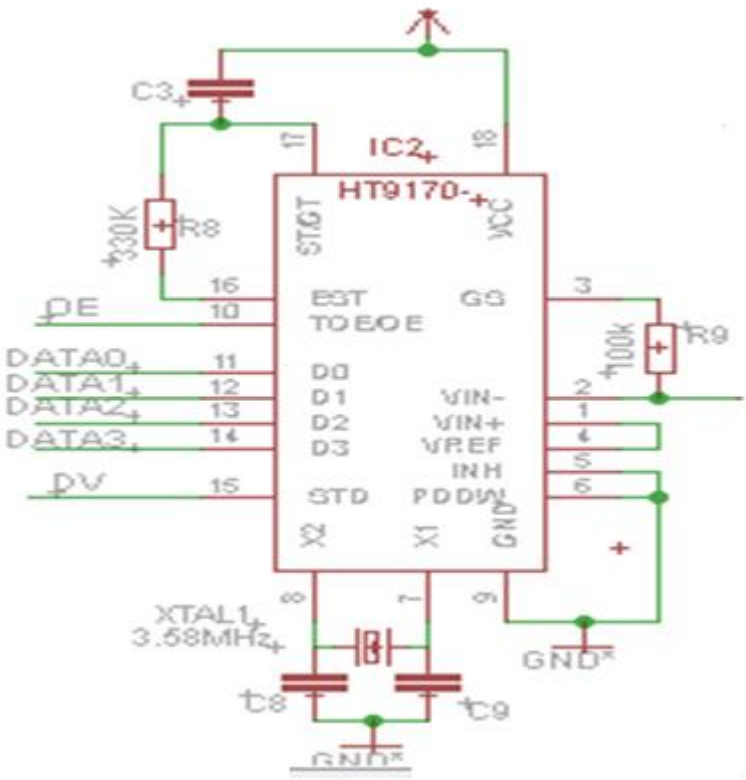

Figure 4.3 Operation of HT9170B IC Decoder

4.3 Atmel ATmega8 Microcontroller

4.3.1 Features

- **High-performance, Low-power Atmel®AVR® 8-bit Microcontroller**
- **Advanced RISC Architecture**
- 130 Powerful Instructions – Most Single-clock Cycle Execution
- 32 × 8 General Purpose Working Registers
- Fully Static Operation
- Up to 16MIPS Throughput at 16MHz
- On-chip 2-cycle Multiplier
- **High Endurance Non-volatile Memory segments**
- 8Kbytes of In-System Self-programmable Flash program memory
- 512Bytes EEPROM
- 1Kbyte Internal SRAM
- Write/Erase Cycles: 10,000 Flash/100,000 EEPROM
- Data retention: 20 years at 85°C/100 years at 25°C(1)

- Optional Boot Code Section with Independent Lock Bits In-System Programming by On-chip Boot Program True Read-While-Write Operation
- Programming Lock for Software Security

- **Peripheral Features**

- Two 8-bit Timer/Counters with Separate Prescaler, one Compare Mode
- One 16-bit Timer/Counter with Separate Prescaler, Compare Mode, and Capture Mode
- Real Time Counter with Separate Oscillator
- Three PWM Channels
- 8-channel ADC in TQFP and QFN/MLF package Eight Channels 10-bit Accuracy
- 6-channel ADC in PDIP package Six Channels 10-bit Accuracy
- Byte-oriented Two-wire Serial Interface
- Programmable Serial USART
- Master/Slave SPI Serial Interface
- Programmable Watchdog Timer with Separate On-chip Oscillator
- On-chip Analog Comparator

- **Special Microcontroller Features**

- Power-on Reset and Programmable Brown-out Detection
- Internal Calibrated RC Oscillator
- External and Internal Interrupt Sources
- Five Sleep Modes: Idle, ADC Noise Reduction, Power-save, Power-down, and Standby

- **I/O and Packages**

- 23 Programmable I/O Lines
- 28-lead PDIP, 32-lead TQFP, and 32-pad QFN/MLF

- **Operating Voltages**

- 2.7V - 5.5V (ATmega8L)
- 4.5V - 5.5V (ATmega8)

- **Speed Grades**

- 0 - 8MHz (ATmega8L)
- 0 - 16MHz (ATmega8)

- **Power Consumption at 4Mhz, 3V, 25□C**

- Active: 3.6mA
- Idle Mode: 1.0mA
- Power-down Mode: 0.5µA

4.3.2 Pin Configurations

Pin configuration of microcontroller shown in figure 4.4 below.

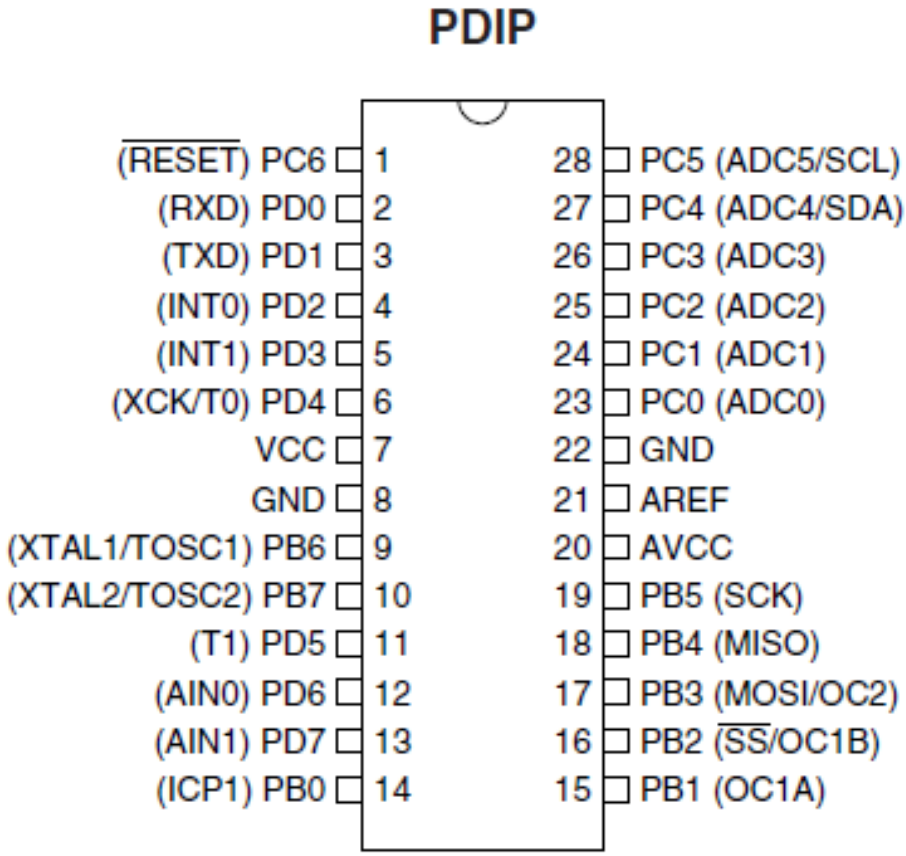

Figure 4.4 Atmel mega 8

4.3.3 General Description

The Atmel®AVR® ATmega8 is a low-power CMOS 8-bit microcontroller based on the AVR RISC architecture. By executing powerful instructions in a single clock cycle, the ATmega8 achieves throughputs approaching 1MIPS per MHz, allowing the system designers to optimize power consumption versus processing speed.

The Atmel®AVR® core combines a rich instruction set with 32 general purpose working registers. All the 32 registers are directly connected to the Arithmetic Logic Unit (ALU), allowing two independent registers to be accessed in one single instruction executed in one clock cycle. The resulting architecture is more code efficient while achieving throughputs up to ten times faster than conventional CISC microcontrollers.

The ATmega8 provides the following features: 8 Kbytes of In-System Programmable Flash with Read-While-Write capabilities, 512 bytes of EEPROM, 1 Kbyte of SRAM, 23 general purpose I/O lines, 32 general purpose working registers, three flexible Timer/Counters with compare modes, internal and external interrupts, a serial programmable USART, a byte oriented Two-wire Serial Interface, a 6 channel ADC (eight channels in TQFP and QFN/MLF packages) with 10-bit accuracy, a programmable Watchdog Timer with Internal Oscillator, an SPI serial port, and five software selectable power saving modes. The Idle mode stops the CPU while allowing the SRAM, Timer/Counters, SPI port, and interrupt system to continue functioning. The Power down mode saves the register contents but freezes the Oscillator, disabling all other chip functions until the next Interrupt or Hardware Reset. In Power-save mode, the asynchronous timer continues to run, allowing the user to maintain a timer base while the rest of the device is sleeping.

The ADC Noise Reduction mode stops the CPU and all I/O modules except asynchronous timer and ADC, to minimize switching noise during ADC conversions. In Standby mode, the crystal/resonator Oscillator is running while the rest of the device is sleeping. This allows very fast start-up combined with low-power consumption.

The device is manufactured using Atmel's high density non-volatile memory technology. The Flash Program memory can be reprogrammed In-System through an SPI serial interface, by a conventional non-volatile memory programmer, or by an On-chip boot program running on the AVR core. The boot program can use any interface to download the application program in the Application Flash memory. Software in the Boot Flash Section will continue to run while the Application Flash Section is updated, providing true Read-While-Write operation. By combining an 8-bit RISC CPU with In-System Self-Programmable Flash on a monolithic chip, the Atmel ATmega8 is a powerful microcontroller that provides a highly-flexible and cost-effective solution to many embedded control applications.

The ATmega8 is supported with a full suite of program and system development tools, including C compilers, macro assemblers, program simulators, and evaluation kits.

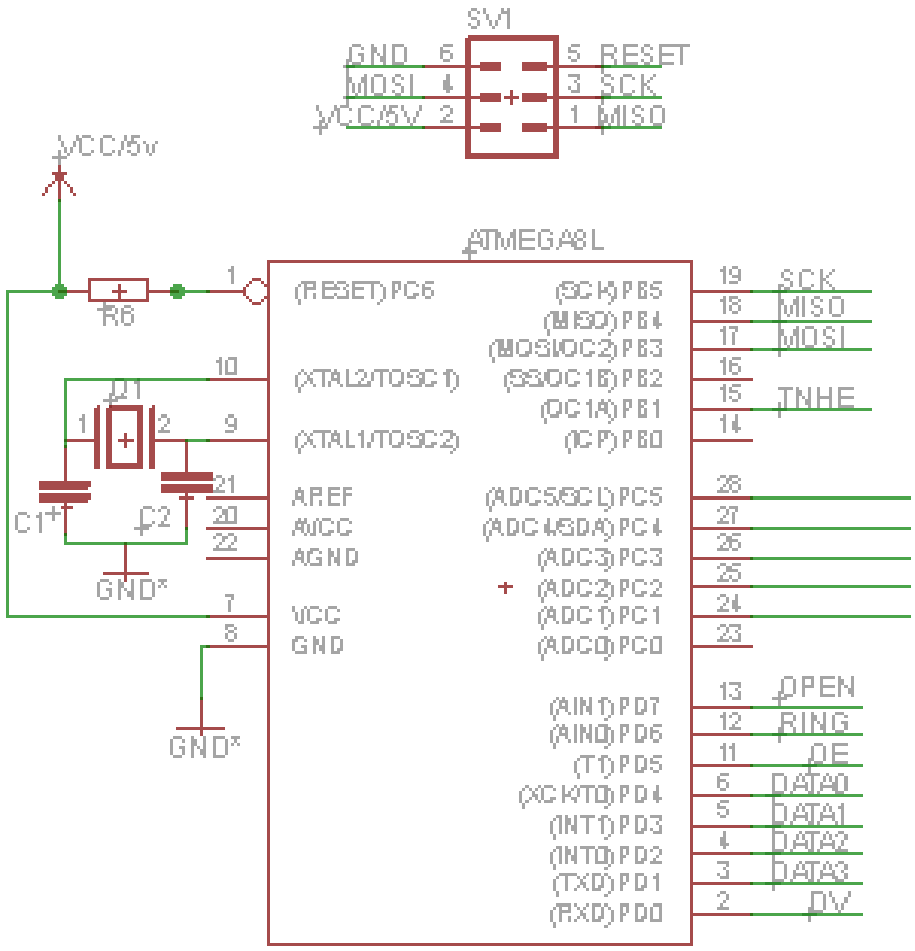

Figure 4.5 PIN connection of ATmega8

4.4 Ringing detection circuit

This circuit detect the level of arrival signal voltage, and if 100V is detect, the circuit send a signal to the processor and then start the main program work.

The Photo coupler isolate the input signal from the output signal and the resistance to isolate currents that are less than 100V as shown in figure 4.6

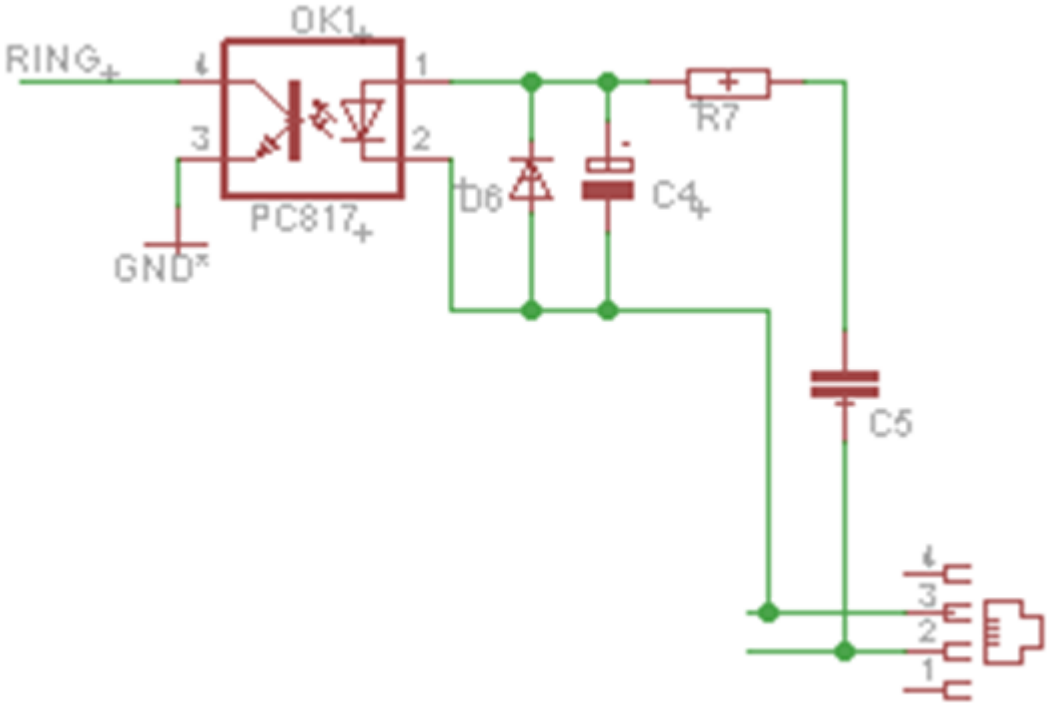

Figure 4.6 Ringing detection circuit

4.5 Open line circuit

This circuit connects a resistor R11 on the line, miming a phone hook-up. This tells the exchange to reduce the voltage applied on line to 12 volt, so that the user can receive the incoming call. As shown in figure 4.7 below.

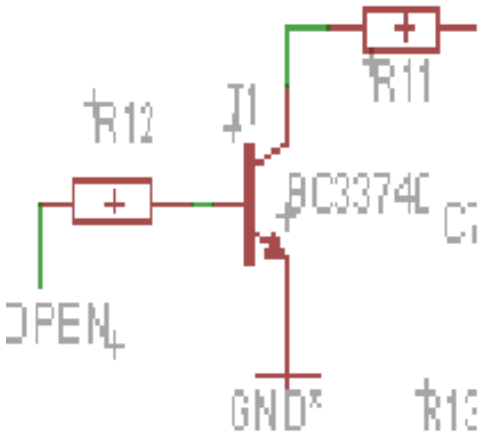

Figure 4.7 Open line circuit

4.6 Transmission over the phone line

The square waveform generated by the microcontroller is filtered by the circuit shown in figure 4.8. This tone sound helps the system to respond to the operation different situations.

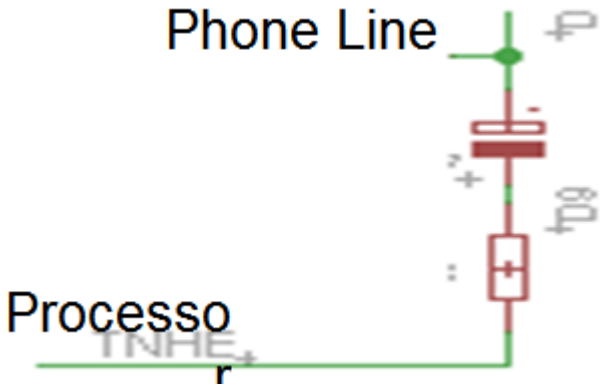

Figure 4.8 Transmission over the phone line circuit

4.7 Home appliances control circuit

This circuit receives commands from the processor to connect the relays through a transistor drive array ULN2003, that as shown in figure 4.9 below.

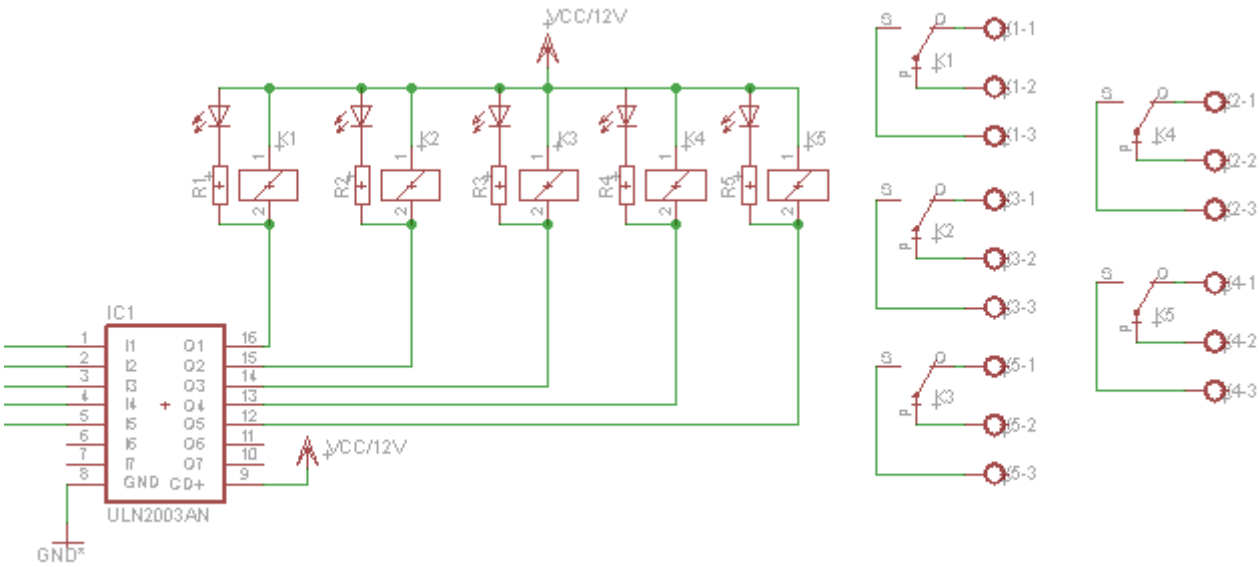

Figure 4.9 Home appliances control circuit

Chapter 5
Functioning Firmware

At the program start, the different I/O's and peripherals are initialized, the processor then calculates the number of incoming rings. The processor gives a command to open the line, once the preprogrammed number of rings is reached as shown in figure 5.1. It transmits a specific tone to notify to the caller that he can dial the password.

After giving the correct secret code to enter the system, the program gives the caller a number of options:

1- **Change password:** The user must press the * (Star) symbol to change the password. This allows the user to change the password through call. The user has to dial 4 digits followed by a * to confirm the new password. The password is stored in the ATmega8 EEPROM, so it is updated and can be used even after the power supply is down.
2- **Device status inquiry:** The user can test the status of any of the five connected devices. For example to know if device Number 1 is on or off, the user has to press number #, then 1 , the ATmega8 send intermittent sound (**bipbip**) if device number 1is on or one long sound (**beep)** if it is off.
3- **Device control:** The user can control any of the five connected devices. For example to control device Number 1, the user has to press number 1, then 1 to turn it on or 0 to turn it off. To control device Number 5, the user has to press number 5, then 1 to turn it on or 0 to turn it off. We also added the possibility of turning on/off all the loads by using the digit 6, in the same way. After executing the command, the ATmega sends a tone corresponding to the new status of the concerned loads as indicated in the previous paragraph.

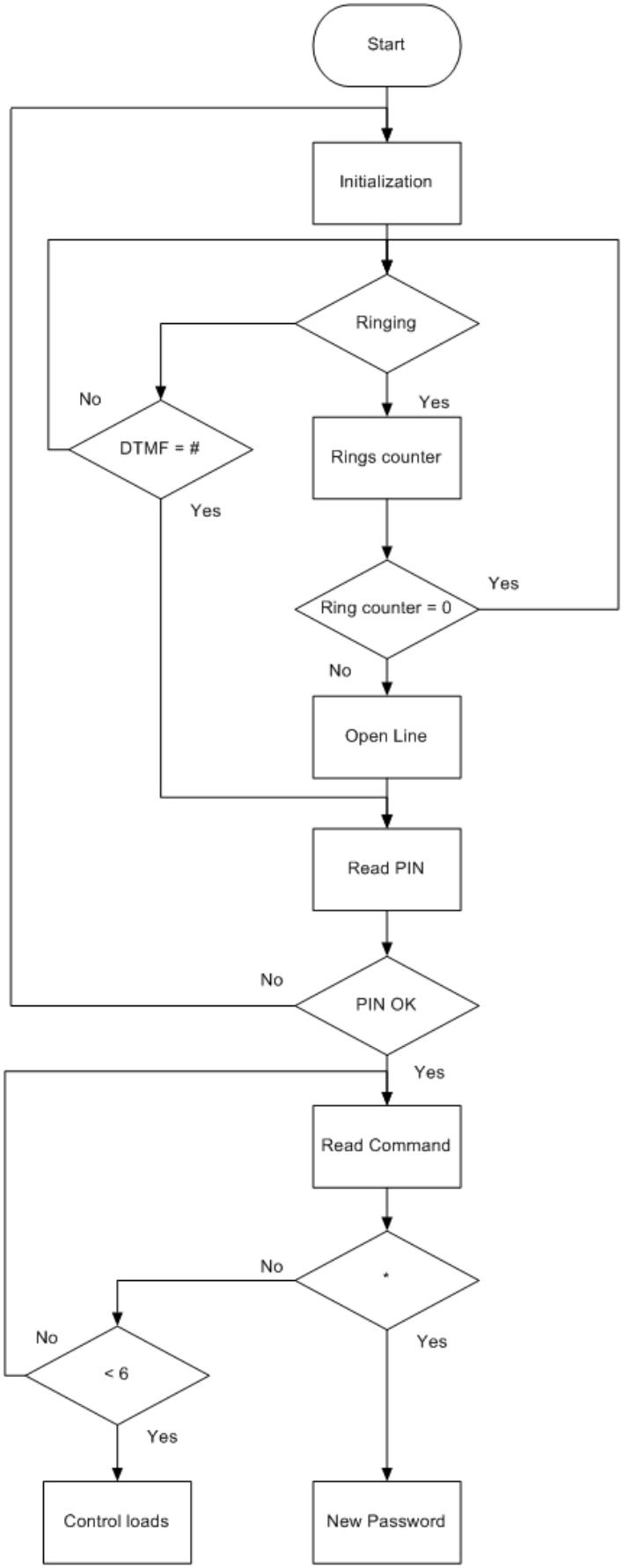

Figure 5.1 Functioning Firmware flowchart.

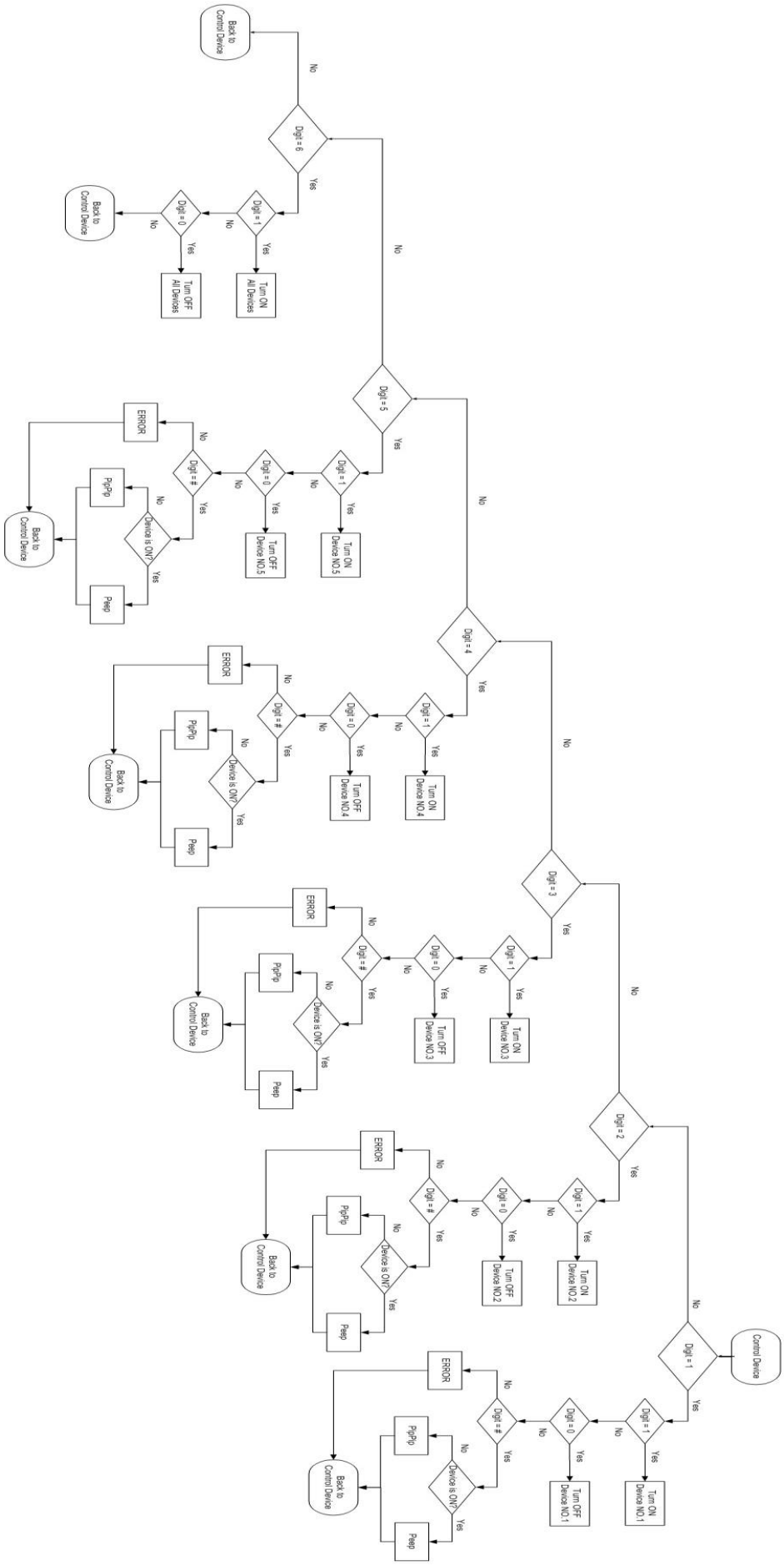

Figure 5.2 Device Control Firmware flowchart.

Chapter 6
Practical test results

Used software **Eagle 7.1** to design the PCB file of control system. The obtained PCB file contain all components were assembled and verified to meet the retirements as shown in Fig 6.1

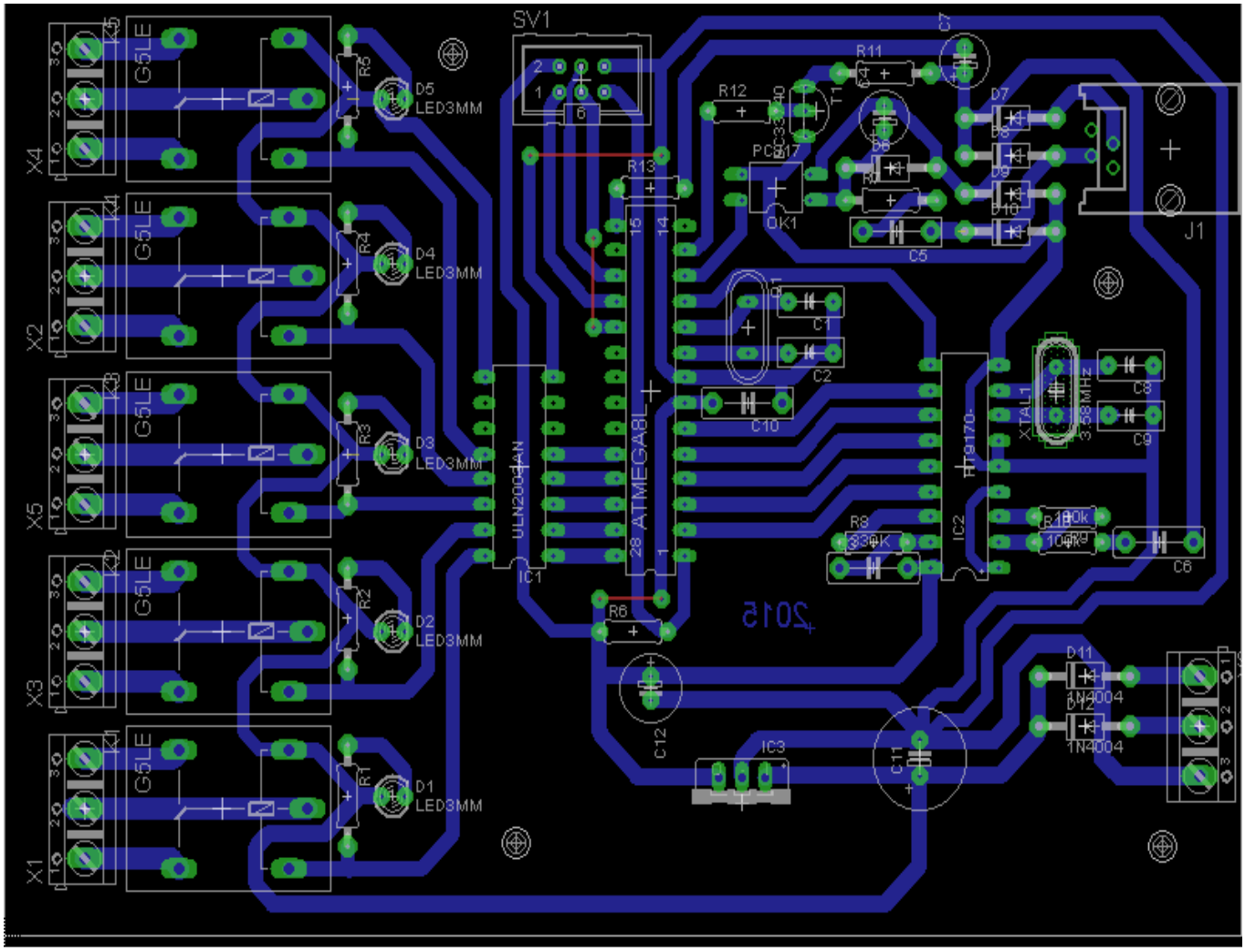

Figure 6.1 PCB file

The **Codevision** (Fig 6.2) was used to develop the ATmega8 firmware, by development of several small software (Routines), to test the fact of readiness of control devices.

Figure 6.2 Codevision

Fig 6.3 & 6.4 show the case of controlling device number 3, which is an obtained an along sequence of debugging.

After several attempts and experiments, to reach all possible utilization scenario and everything in order to reach the result of pathological.

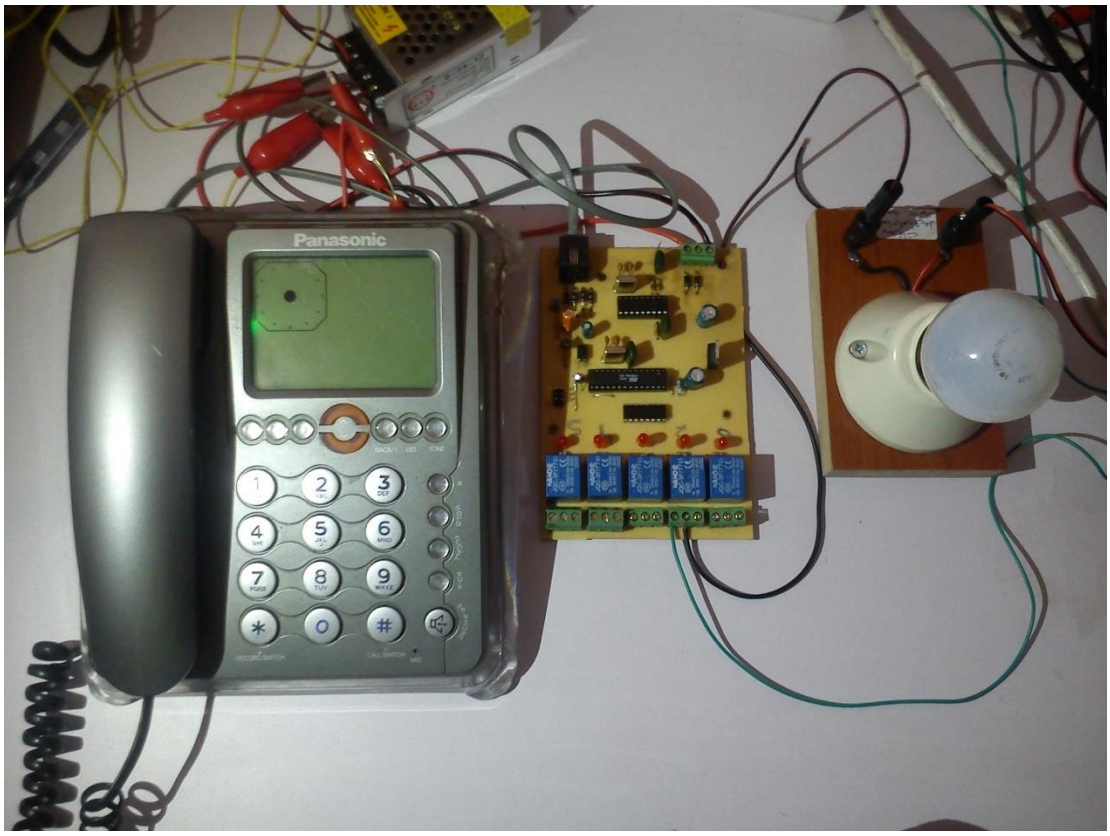

Figure 6.3 Circuit before ringing

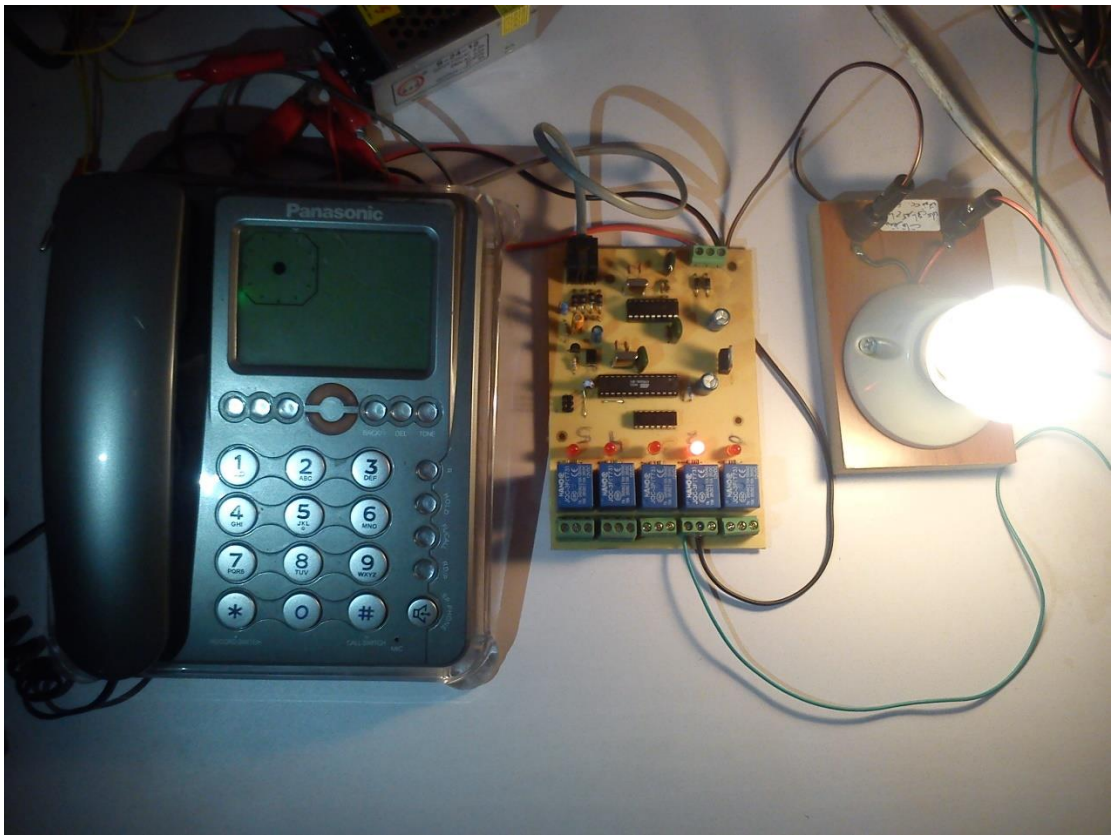

Figure 6.4 Circuit after ringing

Conclusion and future work

A practical application case for this system is implemented to control five power electric devices built around an ATmega8 microcontroller. The automated loads can by any appliances, indoor and outdoor loads and lights, landscape sprinkler timers and more using their phones. The system is equipped with a Personal Identification Number (PIN) to assure the security of the operation.

The system is implemented practically and the expected results are obtained. Some practical problems are encountered during the realization of the practical implementation and are solved using the substitution component.

This control system is recommended for every homes, offices, laboratories, hospitals and industries to aid those working or living in those places when it comes to controlling their appliances, equipment. This control system has to be perceived by the society and the world at large as a necessary and vital technological upgrade

As a future work in the field of the presented project, suggested to develop the system using PLCs instead of the control unit in production lines in industries, to give more reliability and control options, as temperature control, security and more computational work so the system can do more than just turn On/Off the devices.

References

[1] Fathia H. A. Salem, A Design of a Home Appliances Control System using Cell phone & J2ME, A Thesis Submitted in Partial Fulfillment of the Requirement for the Degree of Master of Science in Electrical and Electronic Engineering, University of Garyounis, Benghazi-Libya, 2008.

[2] Sanjit K. Mitra, Digital Signal Processing, Second Edition, McGraw-Hill, University of California, International Edition, 2002.

[3] Sen M Kuo, Bob H Lee, Wenshun Tian, Real-Time Digital Signal Processing Implementations and Applications, Second Edition, John Wiley & Sons, Ltd, 2006.

[4] www.datasheetcatalog.com

[5] Gunter Schmer, DTMF Tone Generation and Detection: An Implementation Using the TMS320C54x, Application Report, Texas Instrument, May 2000

[6] Sharma, Toshendra K. Robotics with AVR. 2nd ed. Noida: Robosapiens India Publications, 2011. Print.

[7] Gupta, Sabuj D., Arman R. Ochi, Mohammad S. Hossain, and Nahid A. Siddique. "Designing & Implementation of Mobile Operated Toy Car by DTMF" International Journal of Scientific and Research 3.1 (2013): n. pag. Web. 12 July 2013. <http://www.ijsrp.org/>.

[8] Singh, Surinder, Mr. "DTMF-Tester." Electronics for You 2003: n. pag. Web.

[9] "Infrared Sensor Designing- Basic." Robosense. N.p., n.d. Web. 14 July 2013.

[10] Hector of SCP. "Dual Tone Multiple Frequency A Guide to Understanding and Exploiting Australia's Most Common Telecommunications Signaling Method." N.p., n.d. Web. 12 July 2013. <http://www.pogden.co.uk>.