Course Contents

1. Introduction

1.1 What do satellites do? (Types of satellites, The satellite market)

1.2 Different orbits for different missions.

1.3 Advantages and disadvantages of satellite communications.

1.4 Frequency Allocations for satellite services Satellite frequencies (L, S, C, X, ku, ka, examples)

2. Orbit control and Launching Methods

2.1 Launch Vehicles and services (How are satellites placed into orbit)

2.2 Keppler law, coverage area, Doppler effect

2.3 Tracking, telemetry and Command

2.4 Attitude control subsystem

2.5 Launching orbits (polar, inclined, equatorial, LEO, MEO, GEO)

2.6 Power, Thermal Control

3. Microwave Link Budget

3.1 Link budget (system noise, uplink, downlink, effects of Rain)

3.2 Cross link

3.3 Interference

Course Contents

4. Space Segment (BUS Configuration and subsystems)

4.1 Transponder model, Payload, Bus, TT&C

4.2 Satellite Transponder

4.3 Station keeping and TT&C subsystem

4.4 Space segment processing (frequency translation)

5.Earth station Segment

5.1 Earth station configuration

5.2 Tracking Telemetry & Command (TT&C) ground facility

5.3 FECC, Direct broadcasting satellites

5.4 Home TV systems, LNB

6. Satellite Antennas

6.1 Corrugated Horn antenna, Double reflector antennas.

6.2 Multifeed Offset Fed Parabolic Reflector.

6.3 Shaped reflector for (multibeam radiation).

6.4 Phased arrays.

6.5 Earth footprints and power levels (EIRP).

Course References

Textbook:

1. Satellite Communications, By Timothy Pratt, Charles Bostian, and Jeremy Allnutt, John Wiley, 2003

References:

1. G. Maral & M. Bousquet, ***Satellite Communication Systems***, John Wiley and Sons, Inc., 1999.
2. Dennis Roddy, "**Satellite Communications**", 3rd edition, McGraw-Hill, 2001.
3. 2. J.J Spilker, "**Digital communications by satellites**", prentice hall, 1977.
4. 3. Bruce R. Elbert, "**Introduction to Satellite communications"**, 2nd Edition, Artech House, 1999.

Seminars: communication applications

1. Satellite Internet Based.
2. Direct Broadcasting satellite services
3. Satellite mobile services
4. VSATs (very Small aperture satellites)
5. Remote sensing satellites +SAR
6. ‘GPS’ Global positioning Satellite system
7. GMDSS, search and rescue(SAR), NOAA
8. Small Satellites
9. Digital communications for satellites
10. International Space Station (ISS)

Required:

1. Written report with references.
2. Each subject should consider a specified sat as an example (30%)
3. Power point presentation (30%)
4. Every student will be given a time to present his report to the class in 45 min and 15 mins for discussion.

4. The seminars will start from the 8th week.

Course Description:

This course covers the most relevant aspects of satellite communications, with emphasis on the most recent applications and developments.

The course begins with a review on the background and basic concepts of satellite communications. Next it covers the orbital aspects, with emphasis on the geostationary orbit. Satellite subsystems, launching methods, and on-board processing are also discussed.

The design of a digital satellite link is discussed in detail, including link budgets, modulation, error control coding, baseband signaling theory, and multiple access methods. Frequency assignments and propagation aspects that affect the satellite link are then discussed.

Antennas and earth station technology are presented, including the design of very small aperture terminals (VSATs). The course then covers non-geosynchronous orbits and their applications. Specific applications of satellites are also explored, including the global positioning system (GPS), satellites for mobile communication, and satellites for internet

Topics to be Covered:

- Introduction and Background
- Orbital Aspects and Launching
- Spacecraft Subsystems
- Link Budgets
- Modulation
- Multiple Access & On-Board Processing
- Coding
- Frequency & Propagation Aspects
- Earth Station Technology & VSATs
- Applications (GPS, Mobile, Internet, etc.)
- Non-Geosynchronous Orbits (NGSO)

Introduction

Types of satellite services

1. **Fixed satellite service (FSS)**
   - Links for existing telephone networks
   - Transmitting TV signals to cable companies.
2. **Broadcasting Satellite Service (BSS)**
   - Direct to home (DTH) =Direct broadcasting satellites (DBS)
3. **Mobile satellite service (MSS)**
   - Land mobile , maritime mobile and aeronautical mobile
4. **Navigation satellite service (GPS)**
   - Global positioning system (S&R)
5. **Meteorgolical satellite service (Weather Forecast)**
6. **Deep Space Satellites**

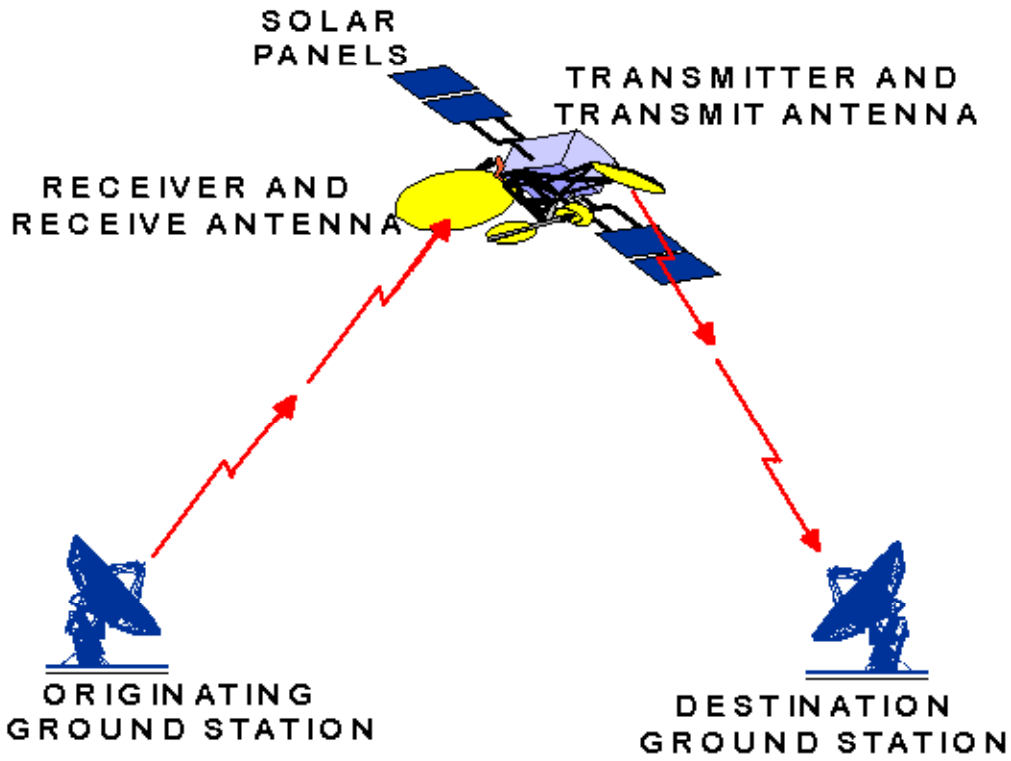

(FSS) Radio Relay station in space

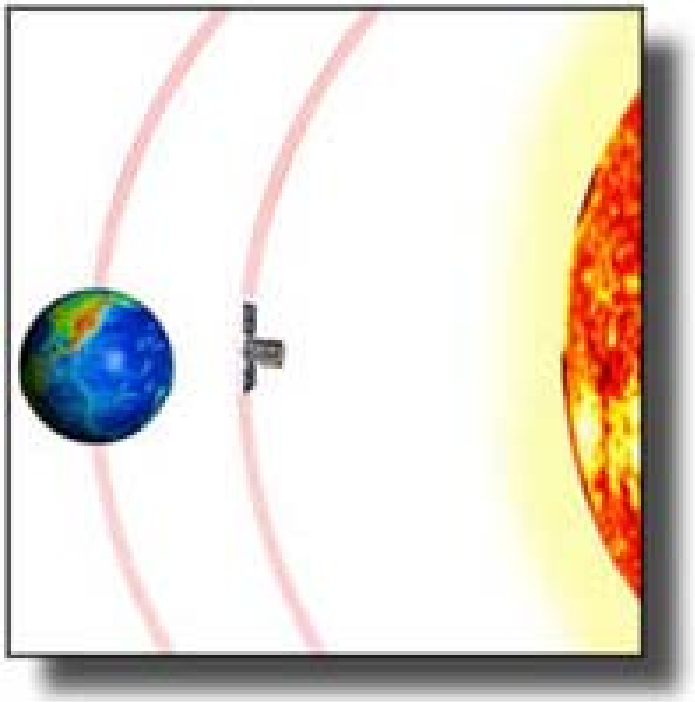

Deep Space Satellites

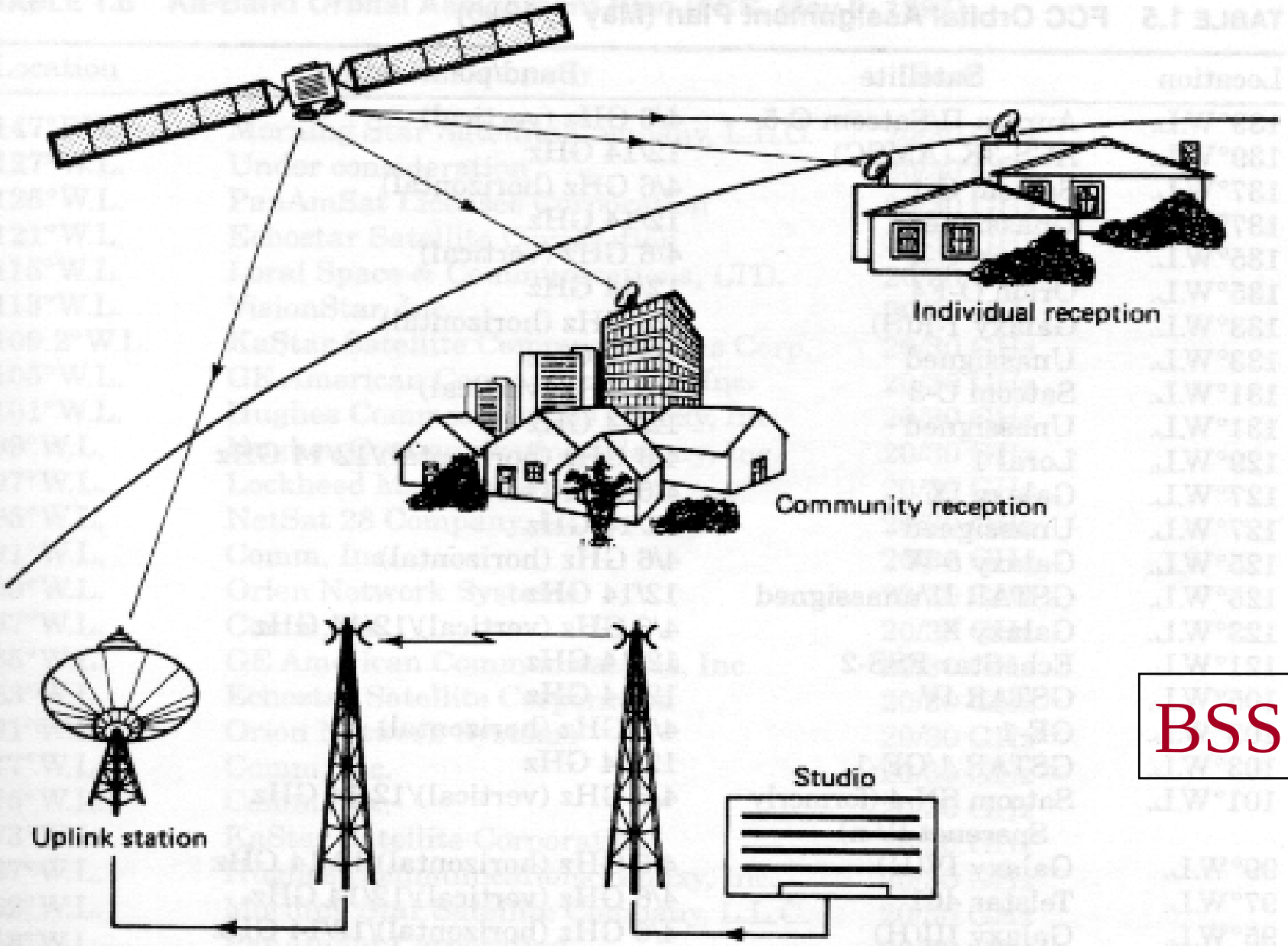

BSS

Figure 1.5 Components of a direct broadcasting satellite system. (*From Government of Canada, 1983, with permission.*)

Advantages of satellite communications

1. Mobile/Wireless Communication, independent of location
2. Wide area coverage:country,continent, or globe
3. Wide bandwidth available throughout
4. Independence from terrestrial infrastructure
5. Rapid installation of ground network
6. Low cost per added site
7. Uniform service characteristics
8. Total service from a single provider
9. Small Fading margin (3dB)

Disadvantages of satellite communications

1. High cost for satellite
2. Short life time maximum of 15 years
3. Redundancy in component!

ITU Spectrum allocation and regions

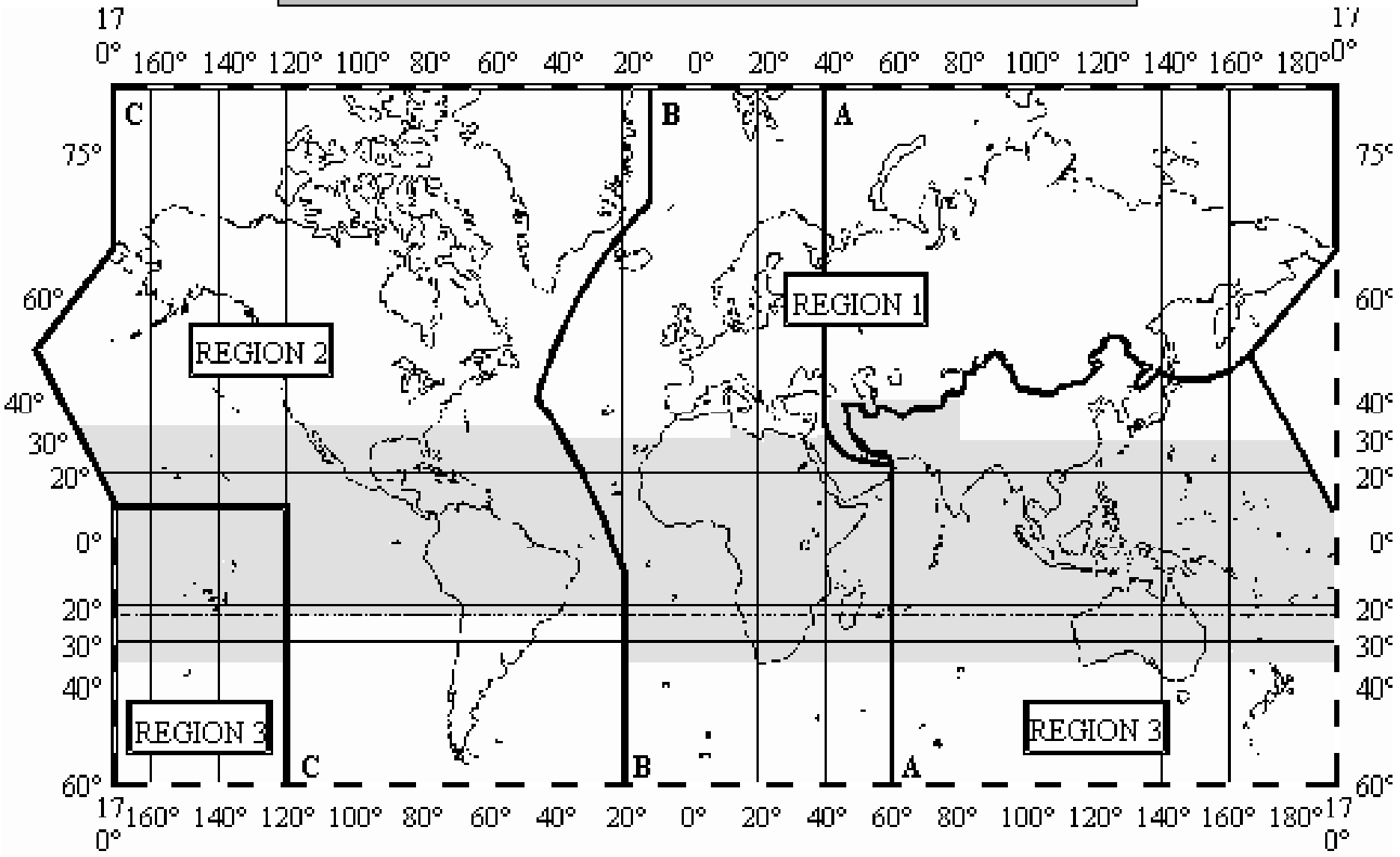

The shaded part represents the Tropical Zones as defined in Nos **S5.16** to **S5.20** and **S5.21.**

TABLE 1.1 Frequency Band Designations

Frequency range, GHz	Band designati
0.1–0.3	VHF
0.3–1.0	UHF
1.0–2.0	L
2.0–4.0	S
4.0–8.0	C
8.0–12.0	X
12.0–18.0	Ku
18.0–27.0	K
27.0–40.0	Ka
40.0–75	V
75–110	W
110–300	mm
300–3000	μm

Service	Bands Up/Down	Earth-to-Space (GHz)	Bandwidth (MHz)	Space-to-Earth (GHz)	Bandwidth (MHz)
Fixed	C/S	5.725–7.075	1,350	3.400–4.200	800
				4.500–4.800	300
	Ku/Ku	12.750–13.250	500	10.700–11.700	1,000
		14.000–14.500	500		
Fixed	Ka/K	27.500–30.000	2,500	17.700–20.200	2,500
Maritime,	L/L	1.6265–1.6455	19	1.530–1.544	14
Aeronautical,		1.6465–1.660	13.5	1.545–1.559	14
Mobile[a]		1.6455–1.6465	1	1.544–1.545	1
Broadcast[a]	/S			2.500–2.690	190
Fixed and Broadcast[b]	/Ku			11.700–12.700	1,000

Ku band: DBS and FSS
C band: FSS (no DBS are allowed)
VHF band : certain MSS and data transfer from weather satellites.
L band: MSS and navigation sat. systems.
Uplink freq. > downlink freq.(Ex. FSS:C=6/4 GHz) (DBS:ku14/12GHz)

Spectrum Allocation

Frequency Spectrum concepts:

- Frequency: Rate at which an electromagnetic wave reverts its polarity (oscillates) in cycles per second or Hertz (Hz).
- Wavelength: distance between wavefronts in space. Given in meters as: $\lambda = c/f$

  Where: c = speed of light ($3x10^8$ m/s in vacuum)

  f = frequency in Hertz
- Frequency band: range of frequencies.
- Bandwidth: Size or "width" (in Hertz) or a frequency band.
- Electromagnetic Spectrum: full extent of all frequencies from zero to infinity.

Radio Frequencies (RF)

- RF Frequencies: Part of the electromagnetic spectrum ranging between 300 MHz and 300 GHz. Interesting properties:
  - Efficient generation of signal power
  - Radiates into free space
  - Efficient reception at a different point.

  <u>Differences depending on the RF frequency used:</u>

  - Signal Bandwidth
  - Propagation effects (diffraction, noise, fading)
  - Antenna Sizes

Microwave Frequencies

- Sub-range of the RF frequencies approximately from 1GHz to 30GHz. Main properties:
  - Line of sight propagation (space and atmosphere).
  - Blockage by dense media (hills, buildings, rain)
  - Wide bandwidths compared to lower frequency bands.
  - Compact antennas, directionality possible.
  - Reduced efficiency of power amplification as frequency grows:

$$\frac{\text{Radio Frequency Power OUT}}{\text{Direct Current Power IN}}$$

Spectrum Regulation

International Telecommunication Union (ITU): Members from practically all countries around the world.

- Allocates frequency bands for different purposes and distribute them around the planet.
- Creates rules to limit RF Interference (RFI) between countries that reuse same RF bands.
- Mediates disputes and creates rules to deal with harmful interference when it occurs.
- Meets bi-annually with its members, to review rules and allocations: World Radio Communication Conference (WRC).
- There are also the Regional Radio Communication Conferences (RCC), which happen less often.

Radio Frequency Spectrum
Commonly Used Bands

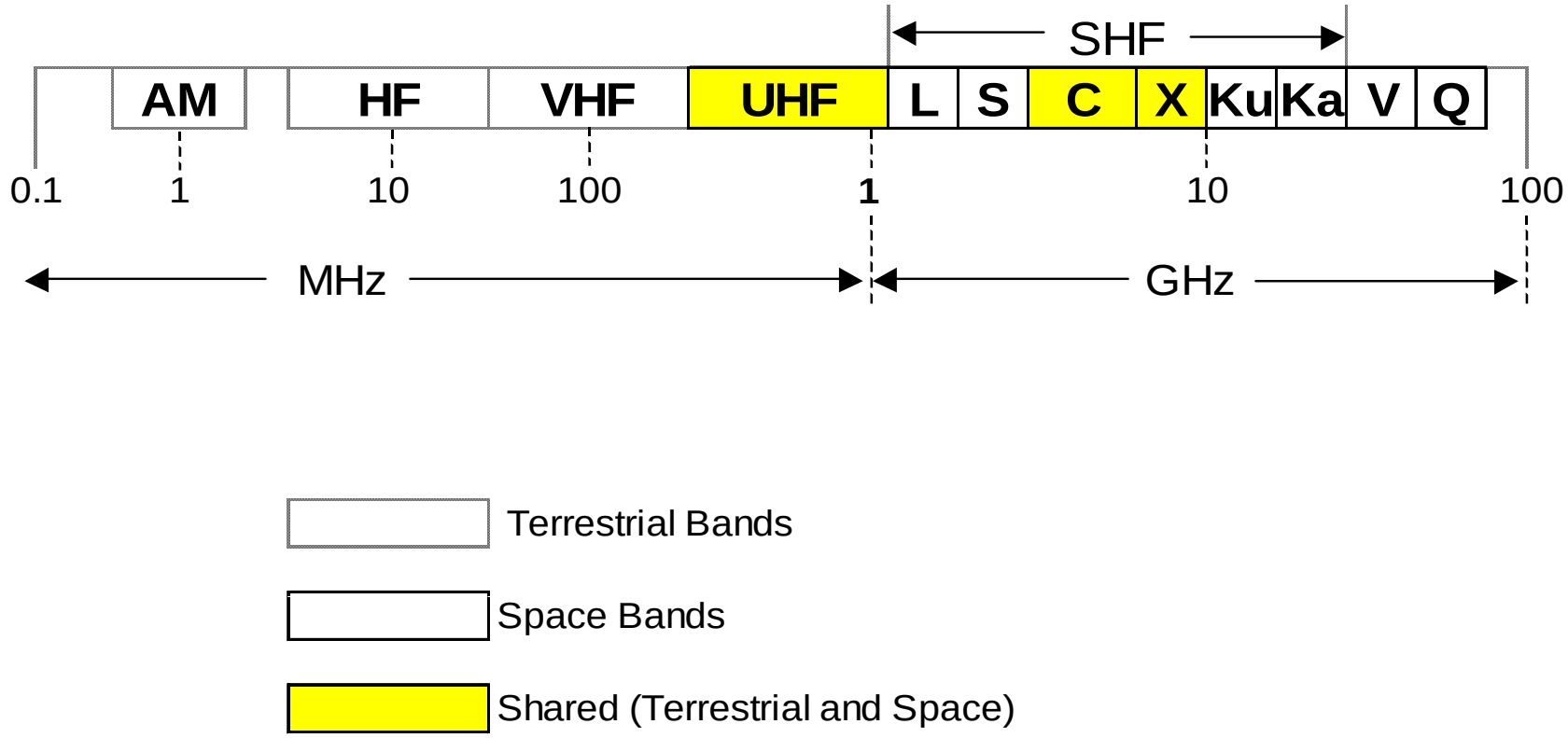

Space-Earth Frequency Usability

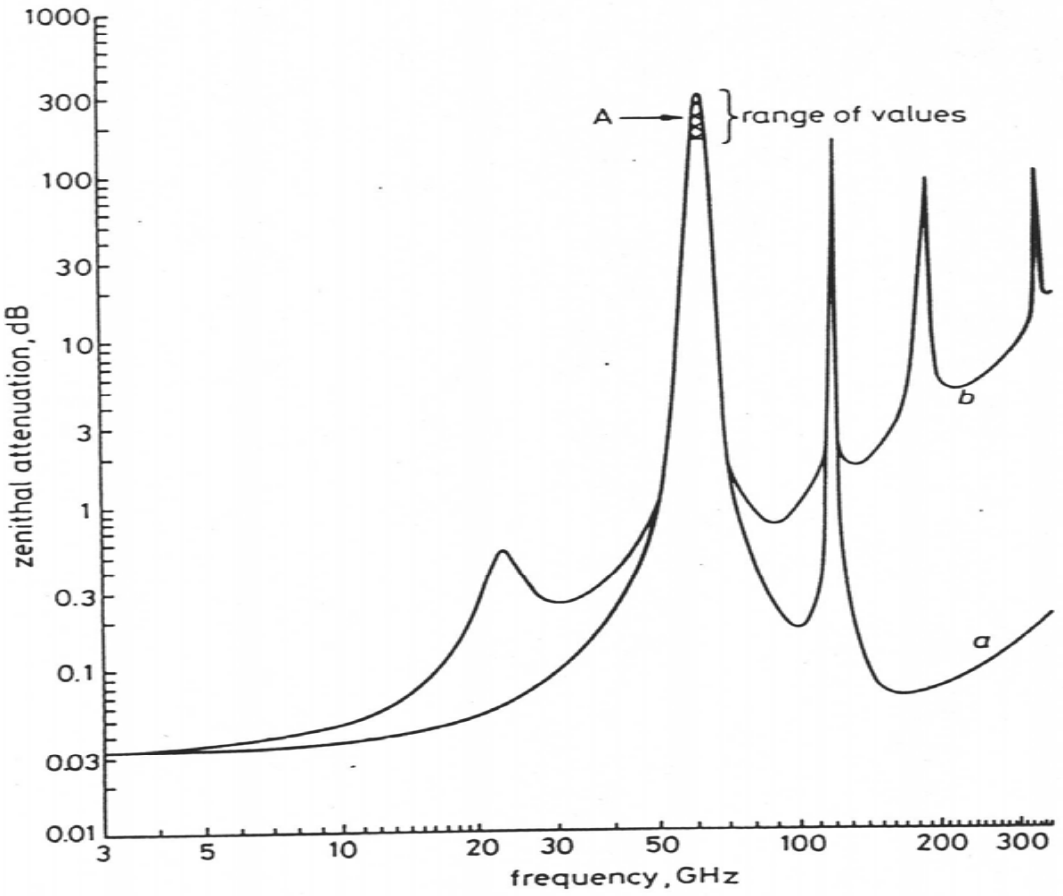

Resonance frequencies below 100GHz:

- 22.2GHz (H_20)
- 53.5-65.2 GHz (Oxygen)

Atmospheric attenuation effects for Space-to-Earth as a function of frequency (clear air conditions). (a) Oxygen; (b) Water vapor. [Source: ITU © 1988]

Insights on Frequency Selection:

(Part 1: Lower frequencies, stronger links)

- LEO satellites need lower RF frequencies:
  - Omni-directional antennas on handsets have low gain - typically G = 0 db = 1
  - Flux density F in W/m^2 at the earth's surface in any beam is independent of frequency
  - Received power is F x A watts , where A is effective area of antenna in square meters
  - For an omni-directional antenna $A = G \lambda^2 / 4\pi = \lambda^2 / 4\pi$
  - At **450 MHz, A = 353 cm^2**, at **20 GHz, A = 0.18 cm^2**
  - Difference is 33 dB - so don't use 20 GHz with an omni!

Insights on Frequency Selection:

(Part 2: Higher frequencies, higher capacity)

- GEO satellites need more RF frequencies
  - High speed data links on GEO satellites need about 0.8 Hz of RF bandwidth per bit/sec.
  - A 155 Mbps data link requires 125 MHz bandwidth
  - Available RF bandwidth:
  - C band 500 MHz (All GEO slots occupied)
  - Ku band 750 MHz (Most GEO slots occupied)
  - Ka band 2000 MHz (proliferating) Q/V band ?

Satellite Systems Applications

Classical satellite systems

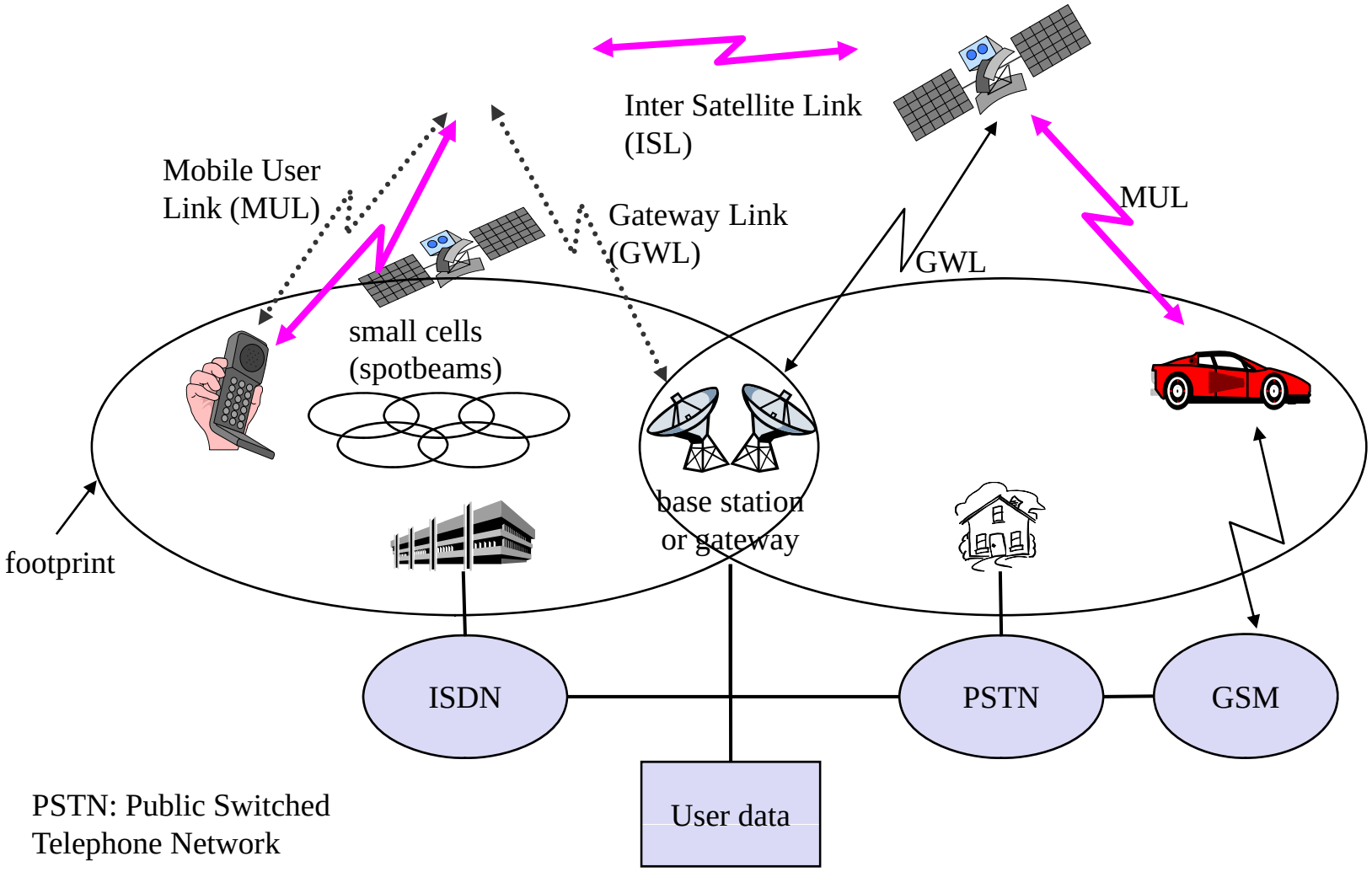

PSTN: Public Switched
Telephone Network

Initial application of GEO Satellites: Telephony

1965	Early Bird	34 kg	240 telephone circuits
1968	Intelsat III	152 kg	1500 circuits
1986	Intelsat VI	1,800 kg	33,000 circuits
2000	Large GEO	3000 kg	8 - 15 kW power 1,200 kg payload

Current GEO Satellite Applications:

- **Broadcasting** - mainly TV at present
  - DirecTV, PrimeStar, etc.
- **Point to Multi-point** communications
  - **VSAT**, Video distribution for Cable TV
- **Mobile Services**
  - Motient (former American Mobile Satellite), INMARSAT, etc.

Satellite Navigation: GPS and GLONASS

- **GPS** is a medium earth orbit (MEO) satellite system
  - GPS satellites broadcast pulse trains with very accurate time signals
  - A receiver able to “see” four GPS satellites can calculate its position within 30 m anywhere in world
  - 24 satellites in clusters of four, 12 hour orbital period
- “You never need be lost again”
  - Every automobile and cellular phone will eventually have a GPS location read-out

LEO Satellites in year 2000

- Several new systems are just starting service
  - Circular or inclined orbit with < 1400 km altitude
  - Satellite travels across sky from horizon to horizon in 5 - 15 minutes
  - Earth stations must track satellite or have omni-directional antennas
  - Constellation of satellites is needed for continuous communication.
  - Handoff needed.

System Elements

Satellite System Elements

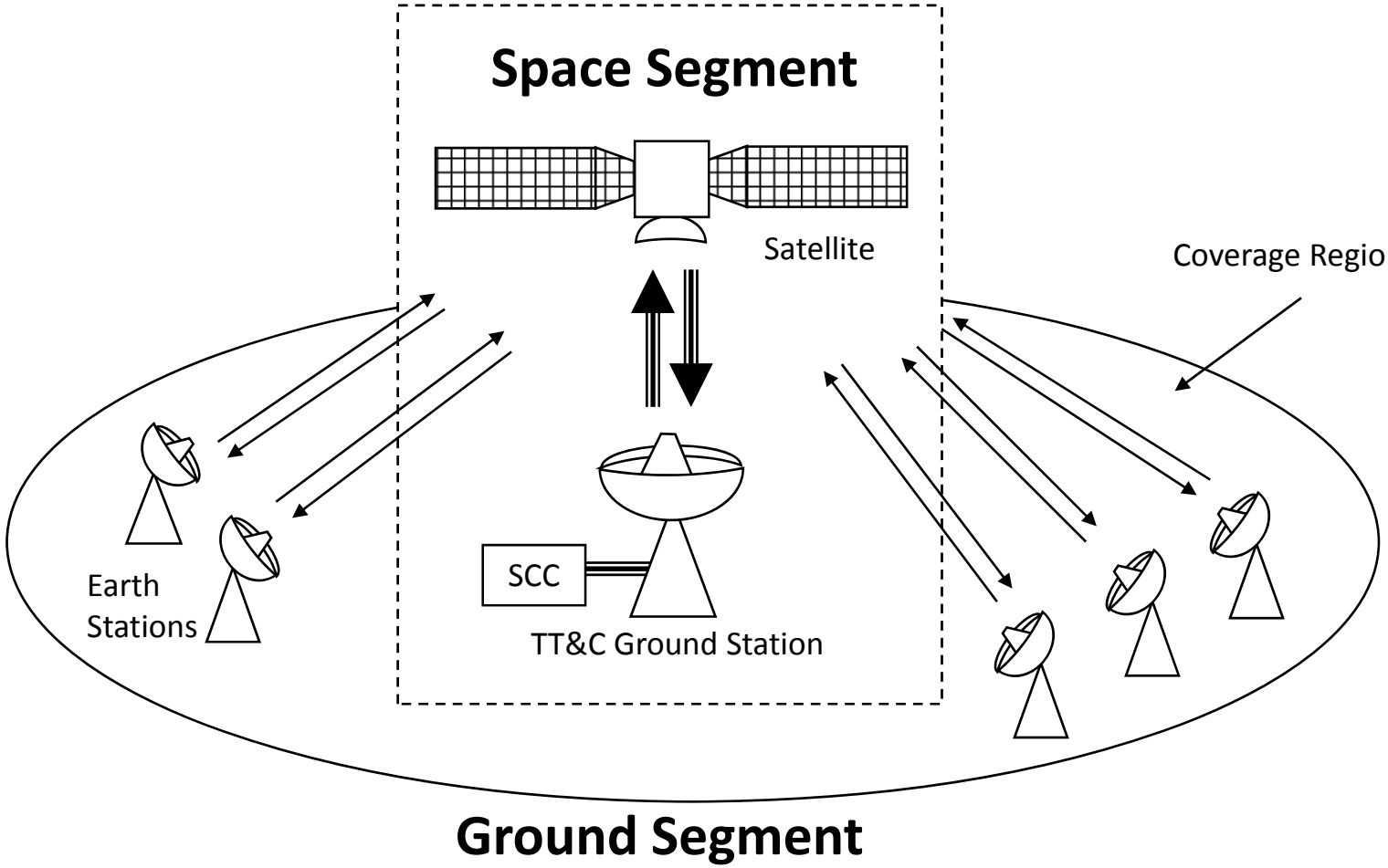

Space Segment

- Satellite Launching Phase
- Transfer Orbit Phase
- Deployment
- Operation
  - TT&C - Tracking Telemetry and Command Station: Establishes a control and monitoring link with satellite. Tracks orbit distortions and allows correction planning. Distortions caused by irregular gravitational forces from non-spherical Earth and due to the influence of Sun and Moon forces.
  - SSC - Satellite Control Center, a.k.a.:
    - OCC - Operations Control Center
    - SCF - Satellite Control Facility

    Provides link signal monitoring for Link Maintenance and Interference monitoring.
- Retirement Phase

Types of Satellite Stabilization

- Spin Stabilization
  - Satellite is spun about the axis on which the moment of inertia is maximum (ex., HS 376, most purchased commercial communications satellite; first satellite placed in orbit by the Space Shuttle.)
- Three-Axis Stabilization
  - Bias momentum type (ex., INTELSAT V)
  - Zero momentum type (ex., Yuri)

Satellite Subsystems

- Communications
  - Antennas
  - Transponders
- Common Subsystem (Bus Subsystem)
  - Telemetry/Command (TT&C)
  - Satellite Control (antenna pointing,attitude)
  - Propulsion
  - Electrical Power
  - Structure
  - Thermal Control

Ground Segment

Collection of facilities, users and applications.

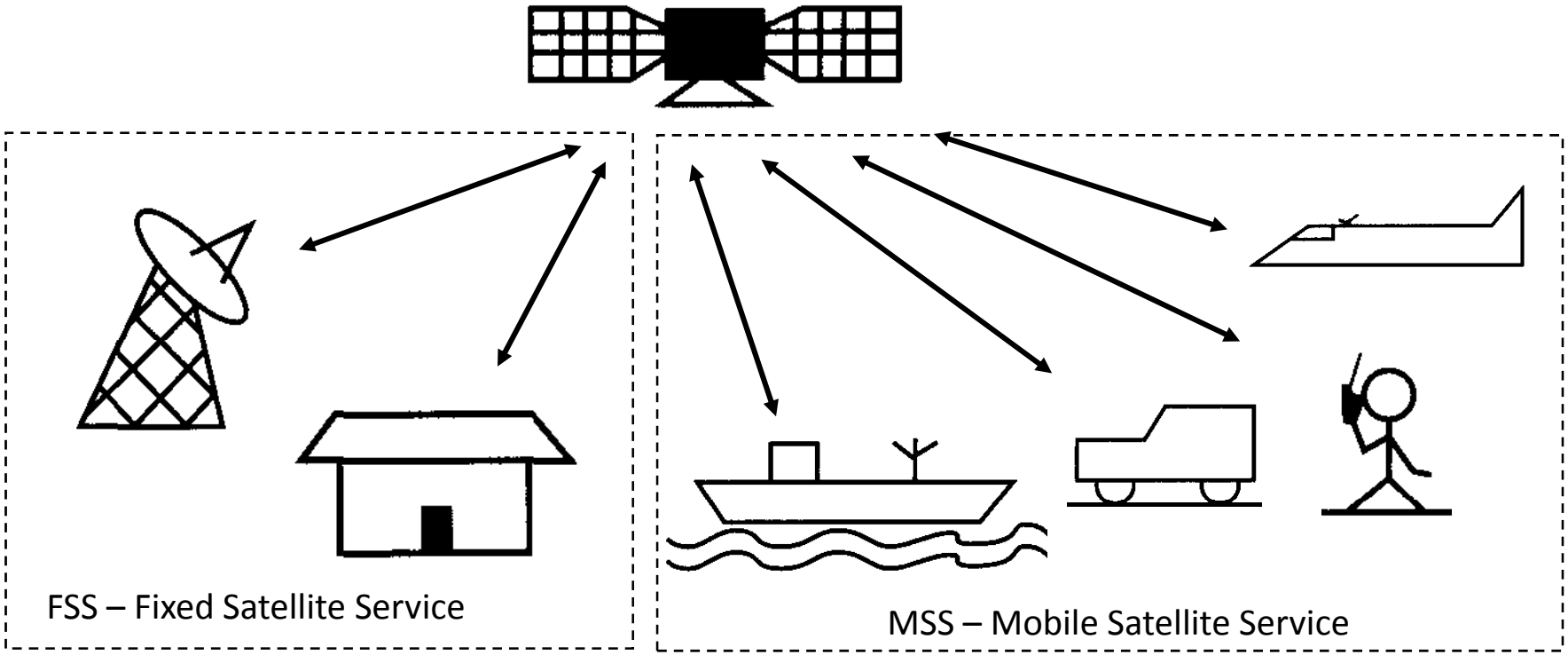

Earth Station = Satellite Communication Station (air, ground or sea, fixed or mobile).

System Design Considerations

Basic Principles

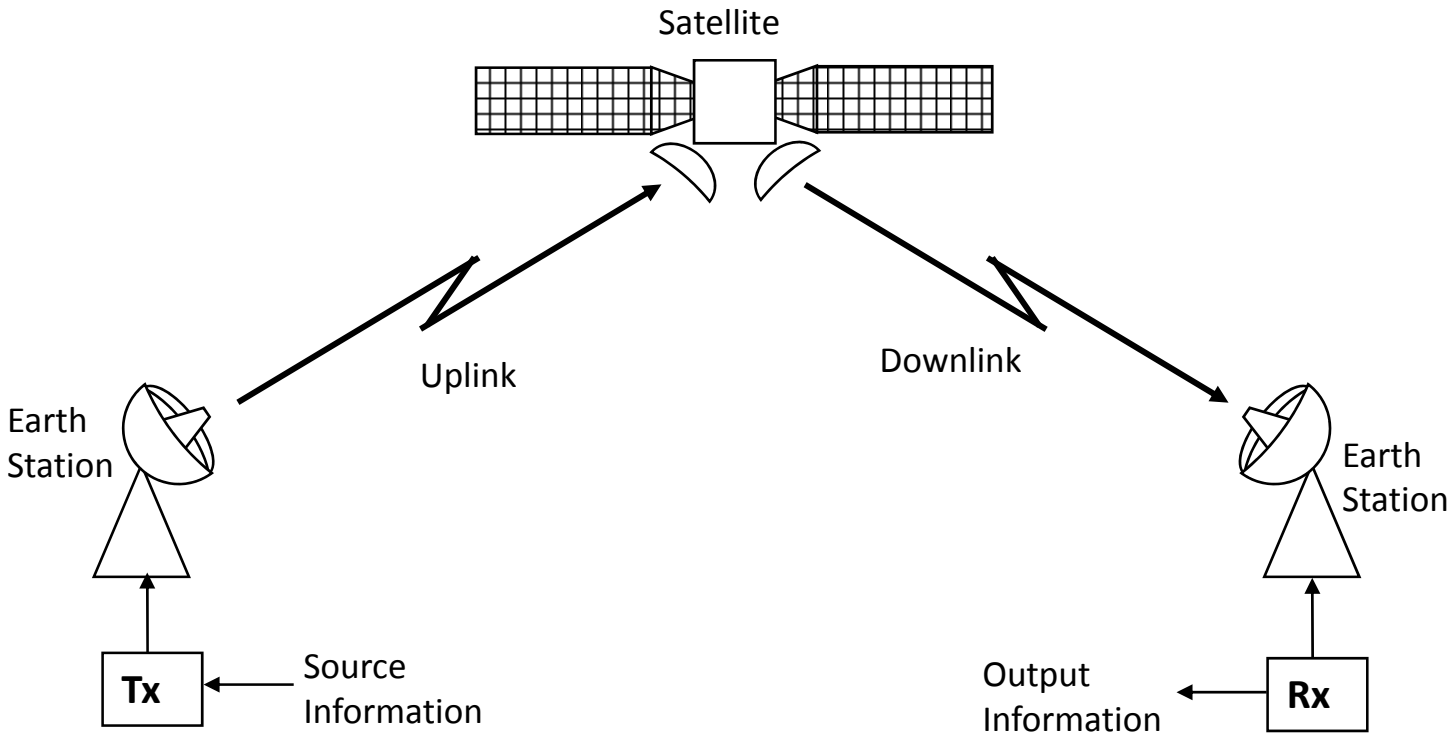

Signals

- Signals:
  - Carried by wires as voltage or current
  - Transmitted through space as electromagnetic waves.
  - Analog:
    - Voltage or Current proportional to signal; e.g., Telephone.
  - Digital: Generated by computers.

    Ex. Binary = 1 or 0 corresponding to +1V or –1V.

Separating Signals

- Up and Down:
  - FDD: Frequency Division Duplexing.
    - f1 = Uplink
    - f2 = Downlink
  - TDD: Time Division Duplexing.
    - t1=Up, t2=Down, t3=Up, t4=Down,....
  - Polarization
    - V & H linear polarization
    - RH & LH circular polarizations

Separating Signals

(so that many transmitters can use the same transponder simultaneously)

- Between Users or “Channels” (Multiple Access):
  - FDMA: Frequency Division Multiple Access; assigns each transmitter its own carrier frequency

    f1 = User 1; f2 = User 2; f3 = User 3, ...

  - TDMA: Time Division Multiple Access; each transmitter is given its own time slot

    t1=User_1, t2=User_2, t3=User_3, t4 = User_1, ...

  - CDMA: Code Division Multiple Access; each transmitter transmits simultaneously and at the same frequency and each transmission is modulated by its own pseudo randomly coded bit stream

    Code 1 = User 1; Code 2 = User 2; Code 3 = User 3

Digital Communication System

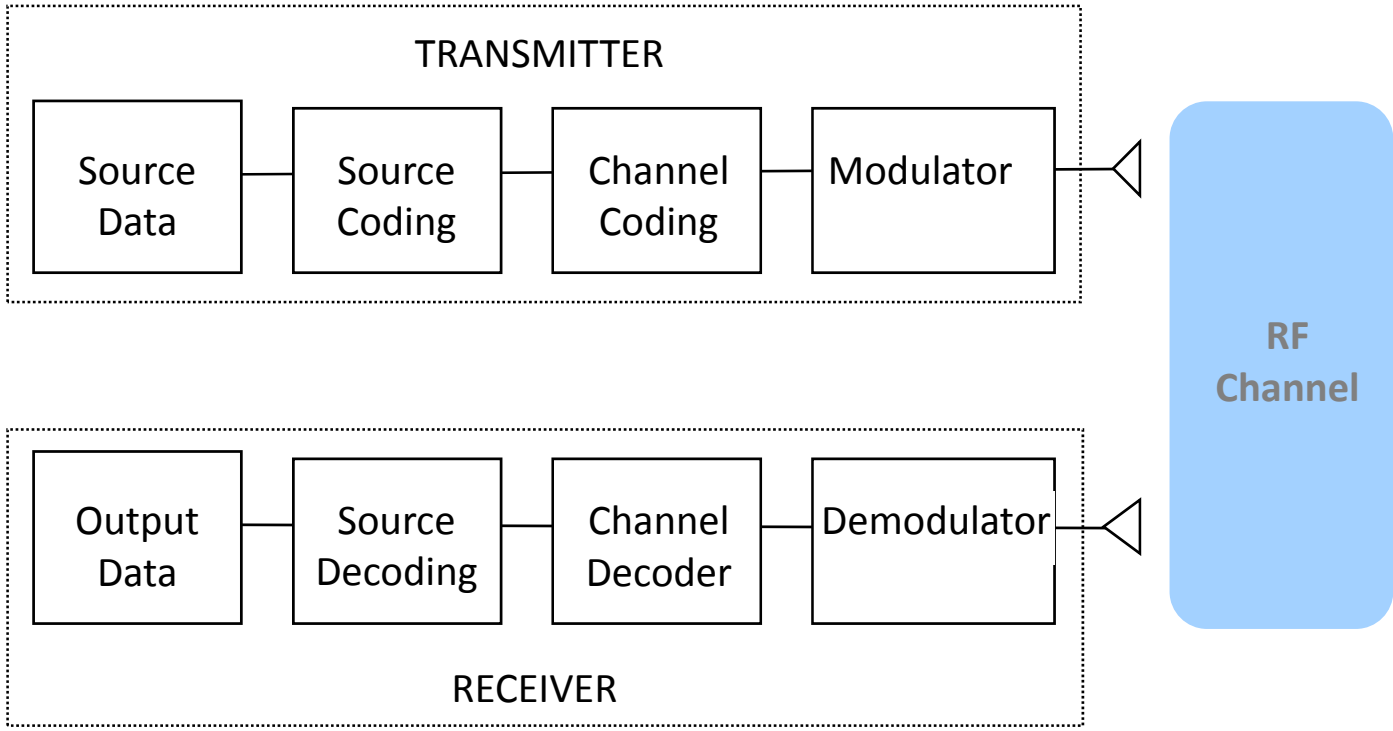

Current Developments and Future Trends

Current Trends in Satellite Communications

- Bigger, heavier, GEO satellites with multiple roles
- More direct broadcast TV and Radio satellites
- Expansion into Ka, Q, V bands (20/30, 40/50 GHz)
- Massive growth in data services fueled by Internet
- Mobile services:
  - May be broadcast services rather than point to point
  - Make mobile services a successful business?

The Future for Satellite Communications – 1

- **Growth requires new frequency bands**
- Propagation through rain and clouds becomes a problem as RF frequency is increased
  - C-band (6/4 GHz) Rain has little impact
    99.99% availability is possible
  - Ku-band (10-12 GHz) Link margin of ≥ 3 dB needed for 99.8% availability
  - Ka-band (20 - 30 GHz) Link margin of ≥ 6 dB needed for 99.6% availability

The Future for Satellite Communications - 2

- **Low cost phased array antennas** for mobiles are needed
  - Mobile systems are limited by use of omni-directional antennas
  - A self-phasing, self-steering phased array antenna with 6 dB gain can quadruple the capacity of a system
  - Directional antennas allow frequency re-use

Satellite-Related Terms

- Earth Stations – antenna systems on or near earth
- Uplink – transmission from an earth station to a satellite
- Downlink – transmission from a satellite to an earth station
- Transponder – electronics in the satellite that convert uplink signals to downlink signals

Ways to Categorize Communications Satellites

- Coverage area
  - Global, regional, national
- Service type
  - Fixed service satellite (FSS)
  - Broadcast service satellite (BSS)
  - Mobile service satellite (MSS)
- General usage
  - Commercial, military, amateur, experimental

Classification of Satellite Orbits

- Circular or elliptical orbit
  - Circular with center at earth's center
  - Elliptical with one foci at earth's center
- Orbit around earth in different planes
  - Equatorial orbit above earth's equator
  - Polar orbit passes over both poles
  - Other orbits referred to as inclined orbits
- Altitude of satellites
  - Geostationary orbit (GEO)
  - Medium earth orbit (MEO)
  - Low earth orbit (LEO)

Geometry Terms

- Elevation angle - the angle from the horizontal to the point on the center of the main beam of the antenna when the antenna is pointed directly at the satellite
- Minimum elevation angle
- Coverage angle - the measure of the portion of the earth's surface visible to the satellite

Minimum Elevation Angle

- Reasons affecting minimum elevation angle of earth station’s antenna (>0°)
  - Buildings, trees, and other terrestrial objects block the line of sight
  - Atmospheric attenuation is greater at low elevation angles
  - Electrical noise generated by the earth's heat near its surface adversely affects reception

GEO Orbit

- Advantages of the the GEO orbit
  - No problem with frequency changes
  - Tracking of the satellite is simplified
  - High coverage area
- Disadvantages of the GEO orbit
  - Weak signal after traveling over 35,000 km
  - Polar regions are poorly served
  - Signal sending delay is substantial

LEO Satellite Characteristics

- Circular/slightly elliptical orbit under 2000 km
- Orbit period ranges from 1.5 to 2 hours
- Diameter of coverage is about 8000 km
- Round-trip signal propagation delay less than 20 ms
- Maximum satellite visible time up to 20 min
- System must cope with large Doppler shifts
- Atmospheric drag results in orbital deterioration

LEO Categories

- Little LEOs
  - Frequencies below 1 GHz
  - 5MHz of bandwidth
  - Data rates up to 10 kbps
  - Aimed at paging, tracking, and low-rate messaging
- Big LEOs
  - Frequencies above 1 GHz
  - Support data rates up to a few megabits per sec
  - Offer same services as little LEOs in addition to voice and positioning services

MEO Satellite Characteristics

- Circular orbit at an altitude in the range of 5000 to 12,000 km
- Orbit period of 6 hours
- Diameter of coverage is 10,000 to 15,000 km
- Round trip signal propagation delay less than 50 ms
- Maximum satellite visible time is a few hours

Frequency Bands Available for Satellite Communications

Band	Frequency Range	Total Bandwidth	General Application
L	1 to 2 GHz	1 GHz	Mobile satellite service (MSS)
S	2 to 4 GHz	2 GHz	MSS, NASA, deep space research
C	4 to 8 GHz	4 GHz	Fixed satellite service (FSS)
X	8 to 12.5 GHz	4.5 GHz	FSS military, terrestrial earth exploration, and meteorological satellites
Ku	12.5 to 18 GHz	5.5 GHz	FSS, broadcast satellite service (BSS)
K	18 to 26.5 GHz	8.5 GHz	BSS, FSS
Ka	26.5 to 40 GHz	13.5 GHz	FSS

Satellite Link Performance Factors

- Distance between earth station antenna and satellite antenna
- For downlink, terrestrial distance between earth station antenna and “aim point” of satellite
  - Displayed as a satellite footprint
- Atmospheric attenuation
  - Affected by oxygen, water, angle of elevation, and higher frequencies