Semiconductor memory

- we discuss various types of semiconductor memories and their characteristics such as capacity, organization and access time.
- We will also show how the memory is connected to CPU.
- Before we mark on the subject of memory, it will be helpful to give an overview of computer organization and review some widely used technology in computer literature.

Some important terminology

- Bit: is a binary digit that can have value 0 or 1
- Byte: is defined as 8 bits.
- Nibble: is half a byte
- A word: is two bytes or 16 bits
- A kilobyte is 2^{10} byte, which is 1024 byte.
- A mega byte is 2^{20} bytes, which is 1048576 bytes
- A gigabyte is 2^{30} bytes
- A terabyte is 2^{40} bytes

memories

- Two categories of memory:
- 1. main memory
- 2. secondary memory

Main Memories

- Two types of memory commonly used in microcomputers are :
- RAM: Random Access Memory (Read/Write memory)
- ROM: Read only Memory

RAM Random Access Memory

- RAM is used by the computer for temporary storage of programs that is running.
- The data is lost when the computer is turned off.
- For this reason, RAM is sometimes called VOLATILE memory

ROM Read Only Memory

- ROM contains program and information essential to operation of the computer.
- The information in ROM is permanent, cannot be changed by the user, and is not lost when the power is turned off.
- It is called NON-VOLATILE memory.

INTERNAL ORGANIZATION OF COMPUTER

- The internal working of every computer can be broken down into three parts:
  - ❑CPU : central processing unit
  - ❑Memory
  - ❑I/O (input/output) devices

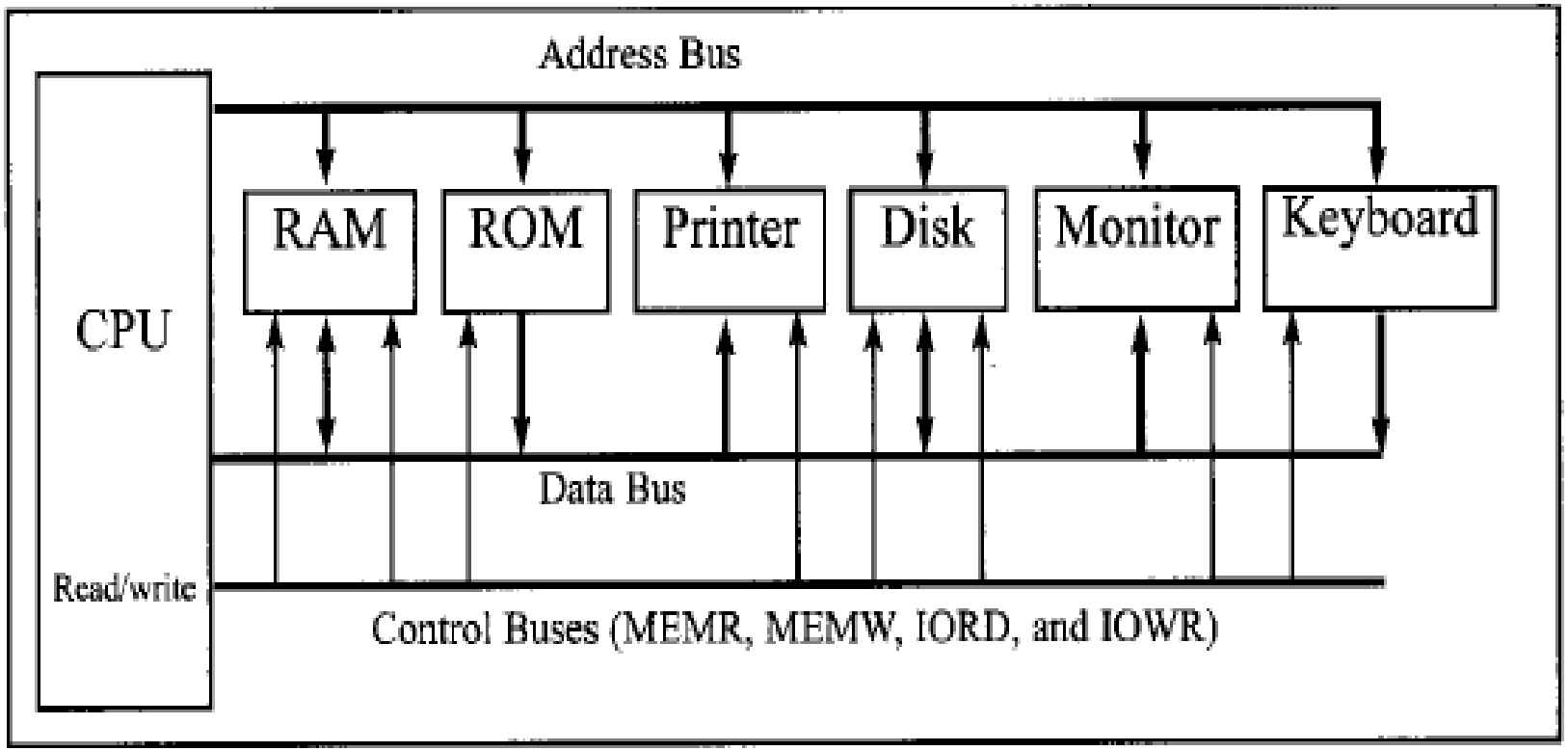
Address Bus
CPU
RAM
ROM
Printer
Disk
Monitor
Keyboard
Data Bus
Read/write
Control Buses (MEMR, MEMW, IORD, and IOWR)

- The function of CPU is to execute (process) information stored in memory. The function of I/O devices such as the keyboard and video monitor is to provide a means of communication with the CPU. The CPU is connected to the memory and I/O through strips of wire called a Bus.

- The Bus inside a computer allows carrying information from place to place just as a street allows cars to carry people from one place to another.

- In every computer, there are three types of Buses:
  - ❑Address bus
  - ❑Data bus
  - ❑Control bus

- For a device (memory or I/O) to be recognized by the CPU, it must assigned an address.
- The address assigned to a given device must be unique; no two devices are allowed to have the same address.
- The CPU puts the address(in binary) on the address bus, and the decoding circuitry finds the device.

- Then CPU uses the data bus either to get data from that device or to send data to it.
- The control buses are used to provide read or write signals to the device to indicate if the CPU is asking for information or sending information.
- Of the three buses, the address bus and the bus determine the capability of a given CPU.

More About the Data Bus

- Because data buses are used to carry information ***<u>in and out</u>*** of a CPU, the more data buses available, the better the CPU.
- If one thinks of data buses as high-way lanes, it is clear that more lanes provide a better pathway between the CPU and its external devices such as (printers, RAM, ROM ,….).

- More data buses means a more expensive CPU or computer. The average size of data buses in CPUs varies between 8 to 64 bits.
- Data buses are bidirectional, because the CPU must use them either to receive or to send data.

- The processing power of a computer is related to the size of its buses, because an 8-bit bus can send out 1 byte at a time, but 16-bit bus cand out 2 bytes at a time, which is twice as fast.

More About the Address Bus

- Because the address bus is used to identify the devices and memory connected to the CPU, the more address buses available, the larger number of devices that can be addressed.
- In other words, the number of address buses for a CPU determines the number of locations with which it can communicate.

- The number of location is always 2^x , where x is the number of address lines, regardless of the size of the data bus.
- For example, a CPU with 16 address lines can provide a total of 2^{16} of address memory (64 Kbyte).
- Each location can have a maximum 1 Byte of data.
- This because all general-purpose microprocessor CPUs are what is called byte addressable.

- Address buses are unidirectional bus, which means that the CPU uses the address only to send out addresses.

CPU and its relation to RAM and ROM

- For the CPU to process information, the data must be stored in RAM or ROM.
- The programs are loaded from the hard drive into RAM to be processed by the CPU.
- The CPU cannot get the information from the disk directly because the disk is too slow.

Memory Capacity:

- The number of bits that a semiconductor memory chip can store is called chip capacity. It can be in units of Kbits, Mbits,….
- This must be distinguished from the storage capacity of computer systems.
- While the memory capacity of memory IC chip is always given in bits, the memory capacity of a computer system is given in Bytes.

Memory Organization

- Memory chips are organized into a number of location within the IC.
- Each location can hold 1bit, 4 bits, 8 bits or even 16 bits, depending on how it is designed internally.
- The number of bits that each location within the memory chip can hold is always equal to the number of data pins on the chip.

How many locations exist inside a memory chip?

- It is depends on the number of address pins.
- The number of Locations within a memory IC always equals 2 to the power of the number of address pins.
- Therefore, the total number of bits that a memory chip can store is equal to the number of locations times the number of data bits per location.

x	2^x
10	1K
11	2K
12	4K
13	8K
14	16K
15	32K
16	64K
17	128K
18	256K
19	512K
20	1M
21	2M
22	4M
23	8M
24	16M
25	32M
26	64M
27	128M

- To summarize:
- A memory chip contains 2^x locations, where x is the number of address pins
- Each location contains y bits, where y is the number of data pins on the chip
- The entire chip will contain $(2^x \ . \ y)$ bits

Memory Speed

- One of the most important characteristic of a memory chip is the speed at which its data can be accessed.
- To access the data, the address is presented to the address pins, the READ pin is activated, and after a certain amount of time has elapsed, the data shows up at the data pins. The speed of memory chip is commonly referred as its access time (AT).

The AT varies from a few nanoseconds to hundreds of nanoseconds.

Example

- A given memory chip has 12 address pins and 4 data pins.
- Find :

❑The organization

❑The capacity

Solution

- This memory chip has 2^12 = 4096 locations
- Each location can hold 4 bit of data. This gives an organization of 4096x4 or 4K x 4
- The capacity is equal to 16 K bits since there is a total of 4096 location and each location can hold 4 bit of data.

Example

- A 512 memory chip has 8 pins for data. Find:

- ❑ The organization
- ❑ The number of address pins for this memory chip

Solution

- A memory chip with 8 data pins means that each location within the chip can hold 8 bits of data. To find the number of location within this memory chip, we divide the capacity by the number of data pins.
- 512K/8 = 64K so, the organization is 64K x 8
- The chip has 16 address lines since 64 = 2^16

ROM

- ROM is a type of memory that does not lose its contents when the power is turned off. For this reason, is called non-volatile memory.
- There are different types of ROM:
  - PROM
  - EPROM
  - EEPROM
  - Flash EPROM
  - Mask ROM

PROM

- PROM refers to the kind of ROM that the user burn information into. In other words, PROM is a user programmable memory.
- For every bit of the PROM, there exist a fuse.
- PROM is programmable by blowing the fuse.
- If the information burned into PROM is wrong, that PROM must be discarded since internal fuses are blown permanently.
- For this reason, PROM is also referred to as one-time programmable (OTP).
- Programming ROP, also called a ROM burner or ROM programmer.

EPROM (erasable programmable ROM) and UV – EPROM

- EPROM was invented to allow making changes in the contents of PROM after it is burned. In EPROM, one can program the memory chip and erase it thousands of times. This especially necessary during development of the prototype of a microprocessor-based project.
- A widely used EPROM is called UV-EPROM (ultraviolet). The only problem with UV-EPROM is that erasing its contents can take up to 20 minutes.
- All UV-EPROM chips have a window through which the programmer can shine ultraviolet radiation to erase the chip's contents.
- The main problem (the major disadvantage) of UV-EPROM is that it cannot be erased and programmed while it is in the system board.

Part #	Capacity	Org.	Access	Pins	V_{PP}
2716	16K	2K × 8	450 ns	24	25 V
2732	32K	4K × 8	450 ns	24	25 V
2732A-20	32K	4K × 8	200 ns	24	21 V
27C32-1	32K	4K × 8	450 ns	24	12.5 V CMOS
2764-20	64K	8K × 8	200 ns	28	21 V
2764A-20	64K	8K × 8	200 ns	28	12.5 V
27C64-12	64K	8K × 8	120 ns	28	12.5 V CMOS
27128-25	128K	16K × 8	250 ns	28	21 V
27C128-12	128K	16K × 8	120 ns	28	12.5 V CMOS
27256-25	256K	32K × 8	250 ns	28	12.5 V
27C256-15	256K	32K × 8	150 ns	28	12.5 V CMOS
27512-25	512K	64K × 8	250 ns	28	12.5 V
27C512-15	512K	64K × 8	150 ns	28	12.5 V CMOS
27C010-15	1024K	128K × 8	150 ns	32	12.5 V CMOS
27C020-15	2048K	256K × 8	150 ns	32	12.5 V CMOS
27C040-15	4096K	512K × 8	150 ns	32	12.5 V CMOS

- For ROM chip 27128, find the number of data and address pins
- Solution
- The 27128 has a capacity 128 Kbits, it has 16Kx8 organization (all ROMs have 8 data pins), which indicates that there are 8 pins for data and 14 pins of address 16K = 2^14

EEPROM

- EEPROM has several advantages over EPROM, such as the fact that its method of erasure is electrical and therefore instant, as opposed to the 20 minutes erasure time required for UV-EPROM.
- In addition, in EEPROM one can select which byte to be erased, in contrast to UV-EPROM, in which the entire contents of ROM are erased.
- However, the main advantage of EEPROM is that one can program and erase it contents while it still in the system board.

Flash Memory EPROM:

- **Since the early 1990s, Flash EPROM has become a popular user-programmable chip for a good reasons.**

- The erasure of the entire contents takes less than a second, or one might say a flash, hence its name " Flash Memory".
- The erasure method is electrical, for this reason it is sometimes referred to as Flash EEPROM. To avoid confusion, it is commonly called Flash Memory.

- The major difference between EEPROM and Flash memory is that when Flash memory's contents are erased, the entire device is erased, in contrast to EEPROM, where one can erase a desired byte.
- In many Flash memories are divided into blocks and the erasure can be done block by block
- Flash memory can be programmed while it is in its socket on the system board.

EEPROMs

Part No.	Capacity	Org.	Speed	Pins	V_{PP}
2816A-25	16K	2K × 8	250 ns	24	5 V
2864A	64K	8K × 8	250 ns	28	5 V
28C64A-25	64K	8K × 8	250 ns	28	5 V CMOS
28C256-15	256K	32K × 8	150 ns	28	5 V
28C256-25	256K	32K × 8	250 ns	28	5 V CMOS

Flash

Part No.	Capacity	Org.	Speed	Pins	V_{PP}
28F256-20	256K	32K × 8	200 ns	32	12 V CMOS
28F010-15	1024K	128K × 8	150 ns	32	12 V CMOS
28F020-15	2048K	256K × 8	150 ns	32	12 V CMOS

Decoder

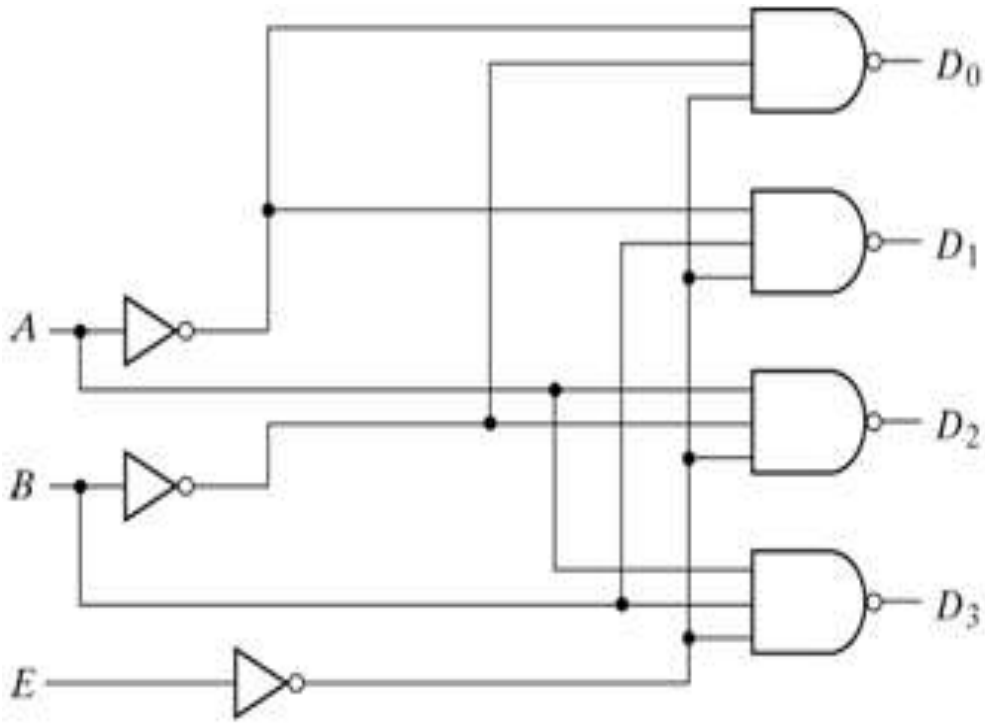

(a) Logic diagram

E	A	B	D_0	D_1	D_2	D_3
1	X	X	1	1	1	1
0	0	0	0	1	1	1
0	0	1	1	0	1	1
0	1	0	1	1	0	1
0	1	1	1	1	1	0

(b) Truth table