Solve the following problems.

1. For the circuit in Fig. 1, find v_1 and v_2 using nodal analysis. **[10 p.]**

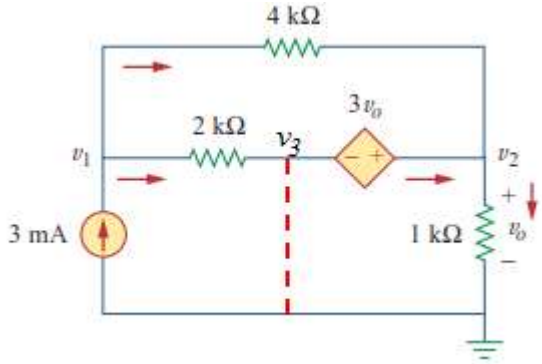

Fig. 1

2. Apply mesh analysis to find i in Fig. 2. **[10 p.]**

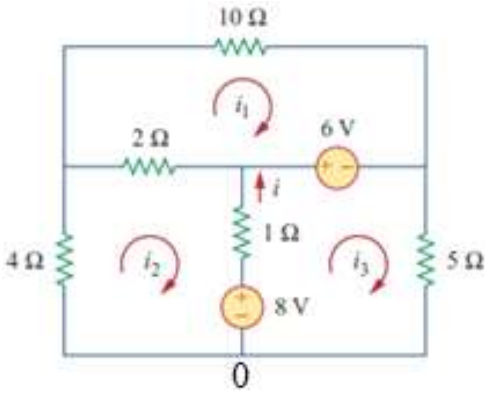

Fig. 2

3. Using the ideal op amp characteristics, obtain $\boldsymbol{i_x}$ and $\boldsymbol{i_y}$ in the op amp circuit in Fig. 3 for given **[10 p.]**

$V = 0.5\ \text{V},\ \ R_1 = 5\ k\Omega,\ \ R_2 = 8\ k\Omega,\ \ R_3 = 10\ k\Omega,\ \ R_4 = 2\ k\Omega$

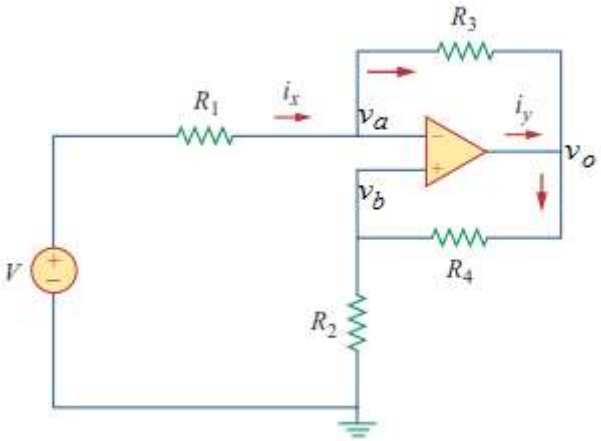

Fig. 3

4. For the circuit in Fig.4, calculate the value of R that will make the energy stored in the capacitor the same as that stored in the inductor under dc conditions. **[10 p.]**

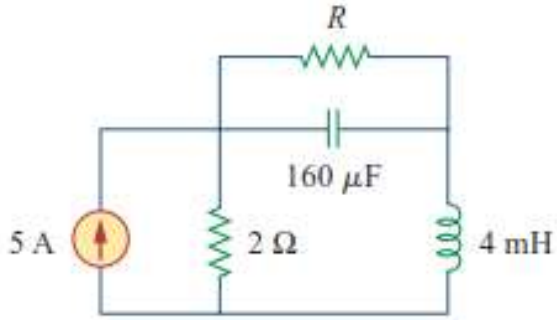

Fig. 4

5. For the first order RC circuit shown in Fig. 5. If we have **[10 p.]**

$v(t) = 10e^{-4t}\ \text{V}\ \ \text{and}\ \ i(t) = 0.2e^{-4t}\ \text{A},\ \ t > 0$:

a) Find the values of R and C.
b) Calculate the time constant τ.
c) Calculate the initial energy in the capacitor.
d) Obtain the time it takes to dissipate 50 percent of the initial energy.

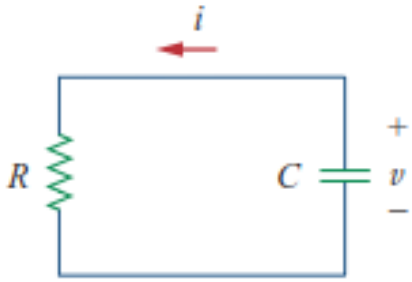

Fig.5

****

With best success

Dr. Eng. Hassan Ahmad